C-9188
09/02/2014

CITY CLERK
ORIGINAL

PROJECT SPECIFICATIONS AND CONTRACT DOCUMENTS

PROJECT NO. 131425

GLENDALE PUBLIC HOUSING - BATHROOM REMODEL - PHASE II

JUNE 2014

REGISTERED ARCHITECT
CERTIFICATE NO.
21845
MANI
SUBRA
Date Signed 06/11/14
ARIZONA, U.S.A.
Expires: 1/31/2015

GLENDALE

CITY OF GLENDALE

ENGINEERING DEPARTMENT
5850 W. Glendale Avenue, Glendale, Arizona 85301 (623) 930-3630

Engineering Department

Memorandum

DATE: June 26, 2014
TO: All Plan and Specification Holders
FROM: Engineering
SUBJECT: PROJECT NO. 131425 – GLENDALE PUBLIC HOUSING – BATHROOM REMODEL – PHASE 2

ADDENDUM NO. 1

In accordance with the contract documents "Information for Bidders," Page 4, Paragraph 12 CHANGES TO PLANS AND DOCUMENTS, the following revisions to the plans and specifications shall become a part of the contract documents and the bidder shall acknowledge receipt thereof as directed in Paragraph 13 of the Information for Bidders.

- Please note the attached specifications to be included within this project.
- Please Note: The bathrooms that will be remodeled at Two (2) different locations – Glendale Homes Complex, 5215 W. Ocotillo Dr. and Lamar Homes Complex, 6842 N. 61st. Ave.
- The bid date has been extended to Thursday July 3, 2014 at 9:00 am.

Questions and clarifications

- Please confirm that the owner will be supplying the new windows in the bathrooms.
  - As per section 08 51 13 – Aluminum Windows 1.01B, Aluminum windows will be provided by the owner and installed by the contractor.
- Please provide specs for the plumbing and electrical fixtures.
  - Please see above regarding attached specifications.
- Please confirm that the apartments will be vacant when the work is performed.
  - The apartments will be vacant when work is scheduled to be performed.
- Will a permit be needed?
  - Yes, there will be a building permit provided with no cost to the contractor. This is a City project therefore the permit fee is waived.

PLEASE SEE ATTACHED

REGISTERED ARCHITECT
CERTIFICATE NO.
21845
MANI
SUBRA
Date Signed 06/26/14
ARIZONA, U.S.A.

Expires: 1/31/2015

TENANT IMPROVEMENTS

GLENDALE PUBLIC HOUSING
BATHROOM REMODEL – Phase 2
TECHNICAL SPECIFICATIONS

Section	Section Title	Pages
	INFORMATION	
	Table of Contents - Technical Specifications	1
DIVISION 01 -	**GENERAL REQUIREMENTS**	
01 10 00	Summary	5
01 20 00	Price and Payment Procedures	2
01 30 00	Administrative Requirements	10
01 40 00	Quality Requirements	5
01 50 00	Temporary Facilities and Controls	8
01 60 00	Product Requirements	4
01 70 00	Execution and Closeout Requirements	12
DIVISION 02 -	**EXISTING CONDITIONS**	
02 01 00	Maintenance of Existing Conditions	3
02 41 19	Selective Demolition	5
DIVISION 06 -	**WOOD, PLASTICS, AND COMPOSITES**	
06 10 00	Rough Carpentry	4
06 20 00	Finish Carpentry	2
DIVISION 07 -	**THERMAL AND MOISTURE PROTECTION**	
07 90 00	Joint Protection	5
DIVISION 08 -	**OPENINGS**	
08 51 13	Aluminum Windows	1
08 80 00	Glazing	6
DIVISION 09 -	**FINISHES**	
09 21 16	Gypsum Board	4
09 30 00	Tiling	4
09 90 00	Painting	7
DIVISION 10 -	**SPECIALTIES**	
10 21 16	Tub/Shower Enclosures	2
10 21 20	Bathroom Accessories	2
DIVISION 22 -	**PLUMBING**	
22 40 00	Plumbing Fixtures	5
DIVISION 26 -	**ELECTRICAL**	
26 00 00	Electrical Requirements	3
DIVISION 31 -	**EARTHWORK**	
31 31 16	Termite Control	2

END OF TABLE OF CONTENTS

SECTION 01 10 00 - SUMMARY

PART 1 - GENERAL

1.01 PROJECT INFORMATION

A. Project Information:
   1. Name: GLENDALE PUBLIC HOUSING BATHROOM REMODEL – Phase 2
   2. Location: 6842 N. 61 Ave., Glendale, AZ 85301

1.02 PROJECT SCOPE OF WORK:

A. BATHROOM TENANT IMPROVEMENTS TO RESIDENTIAL UNITS: Which includes, but is not limited to, the following:

B. Provide all Work, related to the replacement of the bathroom fixtures windows and finishes with new construction, including tiling of the bathroom floors and repair of minor related demolition work to accommodate new work and finishes. Provide all Architectural, Plumbing, Mechanical, and Electrical work as required for a fully complete and operational remodeled facility and as shown in the Drawings and in these Specifications, herein after known as the Construction Documents.

C. Completion of Work: 4 (Four) calendar months.

D. Owner approval in writing must be obtained for all potential changes in Contract Amount or Contract Time or prior to commencement of the Work included in the potential changes..

E. All Work indicated on the Drawings and specified in this Project Manual and as required to produce a complete and functional Project.

1.03 CONTRACTOR'S RESPONSIBILITIES

A. Direct all communication to City Project Manager in writing.

B. Receive clarification from Architect and/or City Project Manager in form of written Architect's Supplementary Instructions.

C. Submittal of Preliminary Project Schedule from Contractor within Ten (10) working days (two calendar weeks) following Notice to Proceed.

D. Submit list of all required submittals by Specification number to Architect and/or City Project Manager within Ten (10) working days from date of Notice to Proceed Contractor shall check and verify that all submittals meet the requirements of the Specifications and Drawings before placing Contractor's stamp on submittals and forwarding these submittals to the Architect's office.

E. Transmit, deliver and pick-up all submittals to Architect and/or City Project Manager's office.

F. Notify City Project Manager, with minimum of 48 hours prior notice, for requested special observation other than regular visit.

G. Notify Architect and Owner for required special inspections, and other items for verification and inspection.

H. The Contractor shall be responsible for the quality of all subcontractors, material and workmanship on this project. Responsibility to correct any inferior quality of work is borne by the Contractor, not by the Architect, City of Glendale Representative, Inspector and/or Project Manager.

I. Prepare close-out materials and Punch Lists. Substantial Completion and Final Punch Lists shall be prepared by Contractor. Architect will conduct Substantial Completion, Semi-Final and Final Inspections.

J. It is required that Contractor photograph, video tape, or otherwise document existing conditions prior to commencing Work.

1.04 ARCHITECT'S RESPONSIBILITIES

A. Review submittals (Shop Drawings):
   1 Allow Seven (7) working days (Monday through Friday) for review of any submittal for review solely by the Architect.
   2. Allow Eight (8) working days (Monday through Friday) for review of any submittal requiring additional review by Architect's consultant(s).
   3. For materials requiring color selection: Products will be reviewed immediately. Colors will be selected when all materials have been submitted and reviewed with the Owner.

B. Keep Owner informed. Contractor to keep Architect informed of any communication breakdowns.
   1. Provide clarification to Contractor and Owner.
   2. Visit Project Site periodically. Attend Progress Meetings as scheduled with Contractor, Owner, and Architect's representatives in attendance.
   3. Observe Work for conformance with these Drawings, Specifications and applicable codes.

C. Conduct Substantial Completion, Semi-Final and Final Inspections Distribute Punch List to Contractor and Owner.

1.05 OWNER'S RESPOSIBILITIES

A Owner-Furnished – Contractor Installed Work: Owner supplied ceramic tile
   1. Arrange and pay for Owner Furnished items and products to be delivered in a timely manner to project Site.
   2. On delivery, inspect Owner Furnished items and products jointly with Contractor.
   3. Submit claims for transportation damage and replace damaged, defective, or deficient items.

B. 1. Windows (Include 1.2 & 3)

1.06 DOCUMENTS

A. Architect:
   1. Architect's Supplemental Instructions (ASI): No cost nor time implication.
   2. Proposal Request (PR): May have cost and/or time implications. Do not proceed without Owner's written directions pertaining to subject Proposal Requests.
   3. Construction Change Directive (CCD).
   4. Change Order (CO):
   5. Reports:

a. Field Reports from Architect.
b. Consultant's Field Reports to Architect.

B. Contractor:
1. Issue Request for Information (RFI) whenever clarification of Document intent or conflict is required.
2. Respond to Architect's ASI or PR Document; document any change in cost or time to Contract.
3. Change Orders: Provide breakdown of labor (hours) and materials (unit cost), include subcontractor quotes if applicable. Contractor shall provide Architect with complete breakdown for labor and material.
4. Payment Application: Review (Rough Copy and Record Drawings) at Project Site on approximately the 25th of the Month, prepare final copy and send to Architect no later than the 30th, Architect will review and send to Owner within Seven (7) working days of receiving Pay Application; and Owner will process payment within 15 working days of receipt of Pay Application from Architect.
5. Retention: Ten Percent (10%) will be held back until Project is Fifty Percent (50%) complete. If satisfactory progress is being made, Project Retention may be reduced to Five (5%).
6. Record Drawings (used for no other purpose): To be maintained at field office by Contractor and reviewed by the Architect when reviewing the Pay Application. Maintain record changes as the Project progresses.
7 Shop Drawings:
a. Material Substitution: Do not submit materials that have not been approved.
b. Submittal Procedure: Architect will retain Two (2) copies of every submittal. Contractor shall submit copies of shop drawings and schedules for parts of work as specified herein and as required for the Work.
c. Cover sheet as supplied by Architect to accompany all Shop Drawings and other submittals. Contractor shall review drawings to verify compliance with these Specifications and Drawings and stamp each submittal prior to submission.

1.07 SUBSTANTIAL/FINAL COMPLETION

A. The Contractor shall give the City Project Manager a written request to inspect for Substantial Completion (SC); and include a Punch List of items to be completed or corrected prior to Final Inspection.

B. The City Project Manager will set the time for SC inspection and so notify the Contractor within Seven (7) working days of receiving the Contractor's request.

C. The Contractor shall deliver the following to the City Project Manager in sufficient time, minimum of seven (7) working days for the Architect to review them prior to the SC inspection:
1. Warranties.
2. Operating Manuals.
3. Project Record Drawings and Project Record Specifications
4. Keying Transfers.
5 Required addresses and contact information
6. Extra Materials (Maintenance stock).
7 Note that As-Builts and Project Close-Out checklist are submitted just prior to Final Completion.

D. The Architect and City Project Manager will make the SC inspection and issue the Contractor a list of items not in accordance with the Contract.

1. If Substantial Completion is not achieved, the Contractor shall promptly correct all non-conforming items and request another SC inspection, at no additional cost to the Owner.
2. When the Architect determines the Work is substantially complete, the Architect will prepare a Certificate of Substantial Completion. The Certificate of Substantial Completion shall describe and establish the responsibilities of the Contractor for security, maintenance, utilities, insurance and damage to the Work; and list any non-conforming items remaining.

E. When all requirements for SC are met, and the Contractor has satisfied the SC "Final Punch List" the Contractor shall:
   1 Notify the City Project Manager that the Work is ready for Final Inspection and Acceptance.
   2. Submit the Final Pay Application (AIA Document G707), Affidavit of Payment of Debts and Claims (G706), Affidavit of Release of Liens (G706 A) and Consent of Surety (G707).

1.08 PROJECT SPECIFIC

A. Project Meetings are to be held weekly. Time and day of week to be determined.

B. Contractor's Construction Area: Within the designated area, show on Construction Site Plan, location for the following:
   1. Construction required fencing, if any.
   2. Construction equipment, field office, storage areas, storage facilities.
   3. Parking for construction personnel and construction vehicles.
   4. Access to Site – Hours of Operation: Contractor to verify Site access with Owner for off-hour work and work on Saturdays and Sundays; though due to the residential nature of the Site, access to work beyond normal working hours will be denied unless exceptional conditions reasons exist for the extension of the normal hours of operation.

C. Utilities: Also see Section 015000 "Temporary Facilities and Controls" for additional requirements:
   1. Use of Existing Utilities: Contractor to provide water, power, gas (LP) for heat, and telephone for construction use. Owner's existing utilities are not available for construction use and shall not be used for any construction purpose
   2. Interruptions of: Provide minimum of 48 hours prior notification to Owner and Architect for any interruptions to Owner's existing utility services.
   3. Electrical utility company maintains energized aerial electrical power lines in immediate vicinity of this Project. Do not consider these lines as insulated. Construction personnel working near these lines are exposed to an extreme hazard from electrical shock. Contractors, their employees, and all other construction personnel working on this Project must be warned of danger and instructed to take adequate protective measures, including maintaining minimum of 10 feet clearance between these power lines and construction equipment and personnel. See OSHA Standard 1926.550(A) 15.

D. Sanitary Controls: Contractor shall provide portable toilet facilities and cool drinking water for the use of all construction personnel. Maintain in good working order and in sanitary condition.

E. Provide waste dumpsters as required to meet Project requirements.

F. Environmental Controls: Contractor shall clean Project Site daily. Comply with requirements of all regulatory agencies. Be aware of sensitivities of adjacent property Owners. Avoid noise, dust, debris, traffic which might be bothersome.

G. Access to existing operating Glendale Housing buildings on the Site is limited to City of Glendale personnel and tenants only. Contractor and all construction personnel shall not enter or loiter around City of Glendale housing facilities.

1. City of Glendale tenants will occupy site and existing adjacent building(s) during entire construction period. Cooperate with Owner and City of Glendale tenants during construction operations to minimize conflicts and facilitate tenants usage. Perform the Work so as not to interfere with tenant's day-to-day operations. Maintain existing required exits, no exceptions.

H. *Protection of Life and Property:* Contractor is responsible for construction processes and procedures.

I. Deportment and Appearance of Personnel: Contractor shall be responsible for conduct of staff. The following items are forbidden on this Project Site.
   1. Alcohol, in sealed or in open containers.
   2. Radios or "boom boxes" or other music producing devices that can be heard by others.
   3. Tobacco. The entire Project is a smoke free area. No tobacco use in City buildings.
   4. Weapons.
   5. Inappropriate language.
   6. Any violations will result in the immediate removal of the individuals involved.

J. Make no comments to any public media without first acquiring City of Glendale's Project Manager's written approval.

K. Demolition items to be disposed of upon approval of the owner or delivered to Owner to be stored as directed. Protection of existing; note any items that are damaged, record condition prior to commencing Work.

L. Contractor to locate all existing utilities prior to commencing Work.

M. Project Close Out: Architect will perform Substantial Completion inspection, Semi-Final inspection and Final Inspection. Retention will be paid at Final Completion. All training operations and Maintenance Manuals shall be submitted prior to Substantial Completion.

N. Two-Year Guarantee: Date of Substantial completion shall become the date of commencement of the Two-Year Guarantee Period; provided, however, that those items of work specified as having longer guarantees or warrantees shall be guaranteed or warranted for the period specified. An eleventh month warranty inspection will be held.

PART 2 - PRODUCTS (Not Used)

PART 3 - EXECUTION (Not Used)

End of Section 01 10 00

SECTION 01 20 00 – PRICE AND PAYMENT PROCEDURES

PART 1 - GENERAL

1.01 SUMMARY

A. Administrative and procedural requirements necessary to prepare and process Applications for Payment. See Conditions of the Contract.

PART 2 - PRODUCTS

2.01 APPLICATION FOR PAYMENT DOCUMENTS

A. Schedule of Values: Statement furnished by Contractor allocating portions of the Contract Sum to various portions of the Work and used as basis for reviewing Contractor's Applications for Payment.
   1. Provide a separate line item in the Schedule of Values for each part of the Work where Applications for Payment may include materials or equipment purchased or fabricated and stored, but not yet installed. Differentiate between items stored on-site and items stored off-site. If specified, include evidence of insurance or bonded warehousing.
   2. Provide separate line items in the Schedule of Values for initial cost of materials, for each subsequent stage of completion, and for total installed value of that part of the Work.
   3. Provide a separate line item in the Schedule of Values for each allowance. Show line-item value of unit-cost allowances, as a product of the unit cost, multiplied by measured quantity. Use information indicated in the Contract Documents to determine quantities.
   4. Each item in the Schedule of Values and Applications for Payment shall be complete. Include total cost and proportionate share of general overhead and profit for each item.

B. Application for Payment: Consistent with previous applications and payments as certified by Contracting Officer and paid for by the Housing Authority of City of Glendale. Initial Application for Payment, Application for Payment at time of Substantial Completion, and final Application for Payment involve additional requirements. Date for progress payment is indicated in Agreement. Period of construction Work covered by each Application for Payment is indicated in Agreement.

1. Payment Application: Submit Progress payments to City/Architect by day of month established in Agreement. Period covered by each Application for Payment is one month, ending on the last day of the month.

C. Final Application for Payment: Include "Consent of Surety to Final Payment."
1. Waivers of Mechanic's Lien: "Contractor's Affidavit of Regarding Settlement of Claims."
2. Evidence that claims have been settled.
3. Final meter readings for utilities, a measured record of stored fuel, and similar data as of date of Substantial Completion or when the Housing Authority of City of Glendale took possession of and assumed responsibility for corresponding elements of the Work.
4. Final, liquidated damages settlement statement.

PART 3 - EXECUTION (not used)

End of Section 01 20 00

SECTION 01 30 00 – ADMINSTRATIVE REQUIREMENTS

PART 1 - GENERAL

1.01 SUMMARY

A. Administrative provisions for coordinating construction operations on Project.
   1. Contractor's construction schedule.
   2. Special reports.

B. Related Section 01 70 00 "Execution and Closeout Requirements" for procedures for coordinating general installation.

1.02 SUBMITTAL ADMINISTRATIVE REQUIREMENTS

A. Architect's Digital Data Files: Electronic copies of CAD Drawings of the Contract Drawings will not be provided by Architect for Contractor's use in preparing submittals.

B. Options and Deviations: Identify options requiring selection by the City/Architect. Identify deviations from Contract Documents on submittals.

C. Furnish copies of final submittals to manufacturers, subcontractors, suppliers, fabricators, installers, authorities having jurisdiction, and others as necessary for performance of construction activities. Show future distribution on transmittal form to City/Architect.

D. Use only submittals for Work that are marked with approval notation from City/Architect's action stamp.

1.03 INFORMATIONAL SUBMITTALS

A. Contractor's Construction Schedule: Initial schedule, of size required to display entire schedule for entire construction period. Submit a working electronic copy of schedule, using software indicated, and labeled to comply with requirements for submittals. Include type of schedule (initial or updated) and date on label.

B. Special Reports: Submit at time of unusual event.

C. Key Plan: Submit key plan of Project site and building with notation of vantage points marked for location and direction of each photograph and video recording. Include same information as corresponding photographic documentation.

D. Digital Photographs: Submit image files within three days of taking photographs.
   1. Digital Camera: Minimum sensor resolution of 8 megapixels.
   2. Format: Minimum 1600 by 1200 pixels, dpi minimum, in unaltered original files, with same aspect ratio as the sensor, uncropped, date- and time- stamped, in folder named by date of photograph, accompanied by key plan file.
   3. Identification: Provide information with each image description in file metadata tag:
      a. Name of Project and date photograph was taken.
      b. Description of vantage point, indicating location, direction (by compass point).
      c. Unique sequential identifier keyed to accompanying key plan.

1.04 COORDINATION

A. Coordinate construction operations included in different Sections to ensure efficient and orderly installation of each part of the Work. Coordinate for proper installation, connection, and operation.
   1. Coordinate installation of different components to ensure maximum performance and accessibility for required maintenance, service, and repair.
   2. Make adequate provisions to accommodate items scheduled for later installation.

B. Administrative Procedures: Coordinate scheduling and timing of required administrative procedures with other construction activities to avoid conflicts and to ensure orderly progress of the Work. Such administrative activities include, but are not limited to, the following:
   1. Installation and removal of temporary facilities and controls.
   2. Delivery and processing of submittals.
   3. Startup and adjustment of systems.
   4. Project closeout activities.

C. Conservation: Coordinate construction activities to ensure that operations are carried out with consideration given to conservation of energy, water, and materials. Coordinate use of temporary utilities to minimize waste. Salvage materials and equipment involved in performance of, but not actually incorporated into, the Work. Refer to other Sections for disposition of salvaged materials designated as Owner's property.

1.05 REQUESTS FOR INFORMATION (RFI) (ARCHITECT'S SUPPLEMENTARY INSTRUCTIONS)

A. Immediately on discovery of the need for additional information or interpretation of the Contract Documents; prepare, coordinate and submit RFI in prompt manner to avoid delays.
   1. Use AIA Document G716, or form with same information, acceptable to Architect.

2. Recommend e-mail transmission of RFIs to City/Architect to avoid mail delays.
3. City/Architect will return RFI submitted by others controlled by Contractor, with no response.
4. On receipt of City/Architect's action, update RFI log, distribute RFI response to affected parties. Review response; notify City/Architect within three days if Contractor disagrees with response.

B. City/Architect's Action: City/Architect will review each RFI, determine action required, and respond. Allow Seven (7) working days for City/Architect's response for each RFI beginning upon City/Architect's receipt of properly formatted RFI. RFIs received by Architect after 1:00 p.m. will be considered as received the following working day.
   1. City/Architect's action may include request for additional information, in which case City/Architect's time for response will date from time of receipt of additional information.
   2. City/Architect's action on RFIs that may result in a change to the Contract Time or the Contract Sum may be eligible for Contractor to submit Change Order Proposal. If Contractor believes the RFI response warrants change in the Contract Time or the Contract Sum, notify City/Architect in writing within five days of receipt of the RFI response.
   3. City/Architect may issue Architect's Supplementary Instruction in response to RFI.

1.06 PROJECT MEETINGS

A. Schedule and conduct meetings and conferences at Project Site, unless otherwise indicated. Record and distribute meeting minutes:
   1. Record significant discussions, agreements, disagreements, corrective measures, actions.
   2. Distribute minutes within three days of meeting to: Owner, City, Architect, and other Attendees.

B. Progress Meetings:
   1. Attendees: Project Representative for the City of Glendale, Engineering Department, Architect, Contractor, prime Subcontractors, suppliers, and other entity(s) concerned with current progress or involved in planning, coordination, or performance of future activities shall be represented at these meetings. Meeting participants shall be familiar with Project and authorized to conclude matters relating to the Work.
   2. Purpose of Progress Meeting: To fully inform Owner and City/Architect of Work progress.

a. Resolve issues which may have developed;
b. Discuss scheduled work, resolve anticipated scheduling conflicts;

C. Pre-Installation Conference: Conduct before each construction activity that requires coordination:
1. Attendees: Installer, manufacturer's representative, fabricators involved in or affected by installation and coordination or integration with other materials and installations that have preceded or will follow. Advise City/Architect and Owner's Commissioning Authority of scheduled pre-installation meeting date.
2. Do not proceed with installation if conference is not successfully concluded. Initiate necessary actions to resolve impediments to Work performance reconvene conference at earliest feasible date.

PART 2 - PRODUCTS

2.01 CONTRACTOR'S CONSTRUCTION SCHEDULE (GANTT CHART)

A. Extend schedule from date established for the Notice to Proceed to date of final completion.
1. Phasing: Arrange list of activities on schedule by phase.
2. Products Ordered in Advance: Include a separate activity for each product. Delivery dates indicated stipulate the earliest possible delivery date.
3. Work Stages: Indicate important stages of construction for each major portion of the Work.
4. Construction Areas: Identify each major area of construction for each major portion of the Work. Indicate where each construction activity within a major area must be sequenced or integrated with other construction activities.
5. Milestones: Include milestones indicated in the Contract Documents in schedule, including, but not limited to, the Notice to Proceed, Substantial Completion, and Final Completion.

B. Submit comprehensive, fully developed, horizontal Gantt-type schedule within timeframe established in the Notice to Proceed.
1. Indicate each significant construction activity separately.
2. Identify first workday of each week with continuous vertical line.

C. At monthly intervals, update schedule to reflect actual construction progress and activities. As the Work progresses, indicate final completion percentage for each activity.

2.02 REPORTS

A. Daily Construction Reports: Prepare a daily construction report recording the following information concerning events at Project site:
   1. List of subcontractors at Project site and approximate count of personnel at Project site.
   2. Equipment at Project site.
   3. Material deliveries.
   4. High and low temperatures, general weather conditions, include presence of rain or snow.
   5. Accidents.
   6. Meetings and significant decisions.
   7. Unusual events (prepare special report, if needed).
   8. Stoppages, delays, shortages, and losses.
   9. Meter readings and similar recordings.
   10. Emergency procedures.
   11. Orders and requests of authorities having jurisdiction.
   12. Services connected and disconnected.
   13. Equipment or system tests and startups.
   14. Partial completions and occupancies.
   15. Substantial Completions authorized.

B. Field Condition Reports: Immediately on discovery of a difference between field conditions and the Contract Documents, prepare and submit a detailed report. Submit with a Request for Information. Include a detailed description of the differing conditions, together with recommendations for changing the Contract Documents.

2.03 SPECIAL REPORTS

A. Reporting Unusual Events: When an event of unusual and significant nature occurs at Project site, whether or not related directly to the Work, prepare and submit special report.
   1. Submit special reports directly to Owner and City/Architect within one day(s) of occurrence. Distribute copies of report to parties affected by the occurrence.
   2. List chain of events, persons participating, response by Contractor's personnel, evaluation of results or effects, and similar pertinent information. Advise Owner in advance when these events are known or predictable.

2.04 PHOTOGRAPHIC MEDIA

A. Digital Images: Provide in JPG format, minimum sensor size of 8 megapixels, and at an image resolution of not less than 1600 by 1200 pixels and 400 dpi.

2.05 SUBMITTAL PROCEDURES

A. General Submittal Procedure Requirements: Prepare and submit submittals required by individual Specification Sections. Types of submittals are indicated in individual Specification Sections.

B. Submit paper submittals through U.S. Postal service or other delivery service.

C. Submit electronic submittals via email as PDF electronic files.
   1. City/Architect will return annotated file. Annotate and retain one copy of file as an electronic Project Record document file.

D. Certificates and Certifications Submittals: Provide a statement that includes signature of entity responsible for preparing certification. Certificates and certifications shall be signed by an officer or other individual authorized to sign documents on behalf of that entity.

E. Product Data: Collect information into single submittal for each element of construction and type of product or equipment. If information must be specially prepared for submittal because standard published data are not suitable for use, submit as Shop Drawings, not as Product Data.
   1. Mark each copy of each submittal to show which products and options are applicable.
   2. Submit Product Data before or concurrent with Samples.

F. Shop Drawings: Prepare Project-specific information, drawn accurately to scale. Do not base Shop Drawings on reproductions of Contract Documents or standard printed data.
   1. Fully illustrate requirements in Contract Documents. Include, as applicable:
      a. Identification of products.
      b. Schedules.
      c. Compliance with specified standards.
      d. Notation of coordination requirements.
      e. Notation of dimensions established by field measurement.
      f. Relationship and attachment to adjoining construction clearly indicated.
      g. Seal and signature of professional engineer if specified.
   2. Sheet Size: Except for templates, patterns, and similar full-size drawings, submit Shop Drawings on sheets at least 8-1/2 by 11 inches (215 by 280 mm) but no larger than 30 by 42 inches (750 by 1067 mm).

G. Submit Samples for review of kind, color, pattern, and texture. Compare and verify these characteristics between sample submittal and actual component as delivered and installed.
   1. Identification: Attach label on unexposed side of Samples that includes:
      a. Generic description of Sample, product and manufacturer's name, source, and applicable Specification Section title and number.

2. Maintain sets of approved Samples at Project site, available for quality-control comparisons.
3. Samples for Initial Selection: Submit manufacturer's color charts consisting of units or sections of units showing the full range of colors, textures, and patterns available.
4. Samples for Verification: Submit full-size units or Samples of size indicated, prepared from same material to be used for the Work, cured and finished in manner specified, and physically identical with material or product proposed for use, and that show full range of color and texture variations expected.
   a. Submit single Sample where assembly details, workmanship, fabrication techniques, connections, operation, and other similar characteristics are to be demonstrated.
   b. If variation in color, pattern, texture, or other characteristic is inherent in material or product represented by a Sample, submit at least three sets of paired units that show approximate limits of variations.

H. Product Schedule: As required in individual Specification Sections, prepare written summary indicating types of products required for the Work and their intended location.

I. Qualification Data: Prepare written information that demonstrates capabilities and experience of firm or person. Include lists of completed projects with project names and addresses, contact information of architects and owners, and other information specified.

J. Product Certificates: Submit written statements on manufacturer's letterhead certifying that product complies with requirements in the Contract Documents.

K. Material Certificates: Submit written statements on manufacturer's letterhead certifying that material complies with requirements in the Contract Documents.

L. Submit material test reports written by qualified testing agency, on agency's standard form; indicate and interpret test results of material for compliance with Contract Documents requirements.

M. Submit written product test reports indicating current product produced by manufacturer complies with requirements in the Contract Documents.

N. Research Reports: Submit written evidence, from a model code organization acceptable to authorities having jurisdiction, that product complies with building code in effect for Project.

O. Tests and Inspections: Comply with Section 01 40 00 "Quality Requirements" requirements.

P. Submit reports written by a qualified testing agency, on testing agency's standard form, indicating and interpreting results of compatibility tests performed before installation of product. Include written recommendations for primers and substrate preparation needed for adhesion.

Q. Field Test Reports: Submit reports indicating and interpreting results of field tests performed either during installation of product or after product is installed in its final location, for compliance with Contract Document requirements.

R. Design Data: Prepare and submit written and graphic information, including, but not limited to, performance and design criteria, list of applicable codes and regulations, and calculations. Include list of assumptions and other performance and design criteria and a summary of loads. Include load diagrams if applicable. Provide name and version of software, if any, used for calculations. Include page numbers.

PART 3 - EXECUTION

3.01 CONSTRUCTION PHOTOGRAPHS

A. Digital Images: Submit digital images exactly as originally recorded in the digital camera, without alteration, manipulation, editing, or modifications using image-editing software.
   1. Take photographs using the maximum range of depth of field, and that are in focus, to clearly show the Work. Photographs with blurry or out-of-focus areas will not be accepted.
   2. Date and Time: Include date and time in file name for each image.
   3. Maintain key plan with each set of construction photographs that identifies each photographic location.
   4. Maintain one set of images accessible in the field office at Project site, available at all times for reference. Identify images in same manner as those submitted to Architect.

B. Preconstruction Photographs: Before commencement of excavation, commencement of demolition, and before starting construction, take photographs of Project site and surrounding properties, including existing items to remain during construction, from different vantage points, as directed by Architect.
   1. Flag construction limits before taking construction photographs.
   2. Take minimum of 20 photographs to show existing conditions adjacent to property before starting Work.
   3. Take minimum of 20 photographs of existing buildings either on property to accurately record physical conditions at start of construction.

4. Take additional photographs as required to record settlement or cracking of adjacent structures, pavements, and improvements.

C. Periodic Construction Photographs: Take minimum of 100 photographs per month, periodically through out the month, submitted with the cutoff date associated with each Application for Payment. Select vantage points to show status of construction and progress since last photographs were taken. Take photographs of work that will be concealed by future work, including underground utilities, and work within framed walls.

D. Architect may request photographs in addition to periodic photographs specified. Additional photographs will be paid by Change Order and are not included in Contract Sum.
   1. Three days' notice will be given, where feasible.
   2. In emergency situations, take additional photographs within 24 hours of request.
   3. Circumstances that could require additional photographs include, but are not limited to:
      a. Special events planned at Project site.
      b. Immediate follow-up when on-site events result in construction damage or losses.
      c. Substantial Completion of a major phase or component of the Work.

3.02 CONTRACTOR'S REVIEW OF ACTION AND INFORMATIONAL SUBMITTALS

A. Action and Informational Submittals: Review each submittal and check for coordination with other Work of the Contract and for compliance with the Contract Documents. Note corrections and field dimensions. Mark with approval stamp before submitting to Architect:
   1. Approval Stamp: Include Project name, location, submittal number, Section title and number, name of reviewer, date of Contractor's approval, statement certifying that submittal has been reviewed, checked, and approved for compliance with Contract Documents.

3.03 CIYY/ARCHITECT'S ACTION OF SUBMITTALS

A. City/Architect will review each submittal, make marks to indicate corrections or modifications required, and return it. City/Architect will stamp each submittal with an action stamp and will mark stamp appropriately to indicate action.
   1. City/Architect will not review submittals that do not bear Contractor's approval stamp and will return them without action.

2. Incomplete submittals are not acceptable, will be considered nonresponsive, and will be returned without review.
   a. Submittals not required by Contract Documents may not be reviewed and may be discarded.

End of Section 01 30 00

SECTION 01 40 00 - QUALITY REQUIREMENTS

PART 1 - GENERAL

1.01 SUMMARY

A. Section includes administrative and procedural requirements for quality assurance and control.

1.02 CONFLICTING REQUIREMENTS

A. Referenced Standards: If compliance with two or more standards is specified and the standards establish different or conflicting requirements for minimum quantities or quality levels, comply with the most stringent requirement. Refer conflicting requirements that are different, but apparently equal, to City/Architect for a decision before proceeding.

B. Minimum Quantity or Quality Levels: The quantity or quality level shown or specified shall be the minimum provided or performed. The actual installation may comply exactly with minimum quantity or quality specified, or it may exceed the minimum limits. To comply with these requirements, indicated numeric values are minimum or maximum, as appropriate, for the context of requirements. Refer uncertainties to City/Architect for a decision before proceeding.

1.03 REPORTS AND DOCUMENTS

A. Test Reports: Prepare and submit certified written reports. Include the following:
   1. Project title and number.
   2. Name, address, and telephone number of testing agency, names of individuals making tests and inspections, and name and signature of laboratory inspector.
   3. Dates and locations of samples and tests.
   4. Description of the Work and test method.
   5. Identification of product and Specification Section.
   6. Complete test data. Record temperature and weather conditions at time of sample taking, testing.
   7. Test results and an interpretation of test results. Date of issue. Comments or professional opinion on whether tested or inspected Work complies with the Contract Document requirements. Recommendations for retesting and criteria for retesting and retest results.

B. Manufacturer's Technical Representative's Field Reports: Prepare written information documenting tests and inspections specified in other Sections. Include:
   1. Name, address, and telephone number of technical representative making report.
   2. Statement on condition of substrates and their acceptability for installation of product.
   3. Statement that products at Project site comply with requirements.
   4. Summary of installation procedures being followed, whether they comply with requirements and, if not, what corrective action was taken.
   5. Results of operational and other tests and a statement of whether observed performance complies with requirements.
   6. Statement whether conditions, products, and installation will affect warranty.
   7. Other required items indicated in individual Specification Sections.

C. Factory-Authorized Service Representative's Reports: Prepare written information documenting tests and inspections specified in other Sections. Include:
   1. Name, address, telephone number of representative making report.
   2. Statement that equipment complies with requirements.
   3. Results of operational and other tests and a statement of whether observed performance complies with requirements.
   4. Statement whether conditions, products, and installation will affect warranty.
   5. Other required items indicated in individual Specification Sections.

D. Permits, Licenses, and Certificates: For Owner's records, submit copies of permits, licenses, certifications, inspection reports, releases, jurisdictional settlements, notices, receipts for fee payments, judgments, correspondence, records, and similar documents, established for compliance with standards and regulations bearing on performance of the Work.

1.04 QUALITY ASSURANCE

A. Manufacturer Qualifications: A firm experienced in manufacturing products or systems similar to those indicated for this Project and with a record of successful in-service performance, as well as sufficient production capacity to produce required units.

B. Fabricator Qualifications: A firm experienced in producing products similar to those indicated for this Project and with a record of successful in-service performance, as well as sufficient production capacity to produce required units.

C. Installer Qualifications: A firm or individual experienced in installing, erecting, or assembling work similar in material, design, and extent to that indicated for this Project, whose work has resulted in construction with a record of successful in-service performance.

D. Professional Engineer Qualifications: Legally qualified to practice in Arizona and experienced in providing engineering services of the kind indicated; and in possession of current registration and in good standing with the Arizona Board of Technical Registration for specific discipline.

E. Specialists: Certain Specification Sections require that specific construction activities shall be performed by entities who are recognized experts in those operations. Specialists shall satisfy qualification requirements indicated and shall be engaged for the activities indicated. Requirements of authorities having jurisdiction shall supersede requirements for specialists.

F. Testing Agency Qualifications: An NRTL, an NVLAP, or an independent agency with the experience and capability to conduct testing and inspection(s) related and integral to testing indicated, document testing according to ASTM E 329; and with additional qualifications specified in individual Sections; and where required by authorities having jurisdiction, and as acceptable to authorities having jurisdiction.

G. Manufacturer's Technical Representative Qualifications: Authorized manufacturer's representative trained and approved by manufacturer to observe and inspect installation of manufacturer's products that are similar in material, design, and extent to those indicated for this Project.

H. Factory-Authorized Service Representative Qualifications: Authorized manufacturer's representative trained and approved by manufacturer to inspect installation of manufacturer's products that are similar in material, design, and extent to those indicated for this Project.

I. Preconstruction Testing: Where testing agency is indicated to perform preconstruction testing for compliance with specified requirements for performance and test methods, Contractor responsibilities include:
   1. Providing test specimens representative of proposed products and construction.
   2. Submitting specimens in timely manner with sufficient time for testing and analyzing results to prevent delaying the Work. Provide in sizes and configurations of test assemblies to adequately demonstrate capability of products to comply with performance requirements.
   3. When testing is complete, remove test specimens, assemblies; do not reuse tested products or materials on Project.
   4. Procure and pay testing agency for testing and reports.

J. Testing Agency Responsibilities: Submit certified written report of each test, inspection(s) related and integral to testing indicated, and similar service to City/Architect with copy to

Contractor. Interpret test results. State in report whether tested and inspected work complies with or deviates from Contract Documents.

1.05 QUALITY CONTROL

A. Contractor Responsibilities: Tests, testing and inspection(s) related and integral to testing indicated, are Contractor's responsibility at Contractor's expense. Perform additional quality-control activities required to verify that Work complies with requirements, whether specified or not.
   1. Provide specified quality-control services, and those required of Contractor by authorities having jurisdiction, whether specified or not.
   2. Engage qualified testing agency to perform quality-control services.
   3. Notify Owner, City/Architect and testing agencies at least 48 hours in advance of time when Work that requires testing will be performed.
   4. Notify Owner, City, Architect, and Architect's Consultant(s) at least 48 hours in advance of time when Work requiring Consultant's inspection of testing specimen collection, or other special inspection will be performed.
   5. Submit a certified written report, in duplicate, of each quality-control service.
   6. Testing and inspection requested by Contractor and not required by the Contract Documents are Contractor's responsibility.
   7. Submit additional copies of each written report directly to authorities having jurisdiction, when they so direct.

B. Manufacturer's Field Services: Where indicated, engage factory-authorized service representative to inspect field-assembled components and equipment installation, including service connections.

C. Manufacturer's Technical Services: Where indicated, engage manufacturer's technical representative to observe and inspect the Work. Manufacturer's technical representative's services include participation in preinstallation conferences, examination of substrates and conditions, verification of materials, observation of Installer activities, inspection of completed portions of the Work, and submittal of written reports.

D. Retesting/Reinspecting: Provide quality-control services, including retesting and reinspecting, for construction that replaced Work that failed to comply with the Contract Documents.

E. Cooperate with agencies performing required tests, inspections, and similar quality-control services, and provide reasonable auxiliary services as requested. Notify agency sufficiently in advance of operations to permit assignment of personnel. Provide:
   1. Access to the Work. Provide adequate quantities of representative samples of materials that require testing and inspecting. Assist agency in obtaining samples.

2. Incidental labor and facilities necessary to facilitate tests and inspections.
3. Facilities for storage and field curing of test samples.
4. Delivery of samples to testing agencies.
5. Preliminary design mix proposed for use for material mixes that require testing.
6. Security and protection for samples and for testing and inspecting equipment at Project site.
7. Coordinate and schedule tests, inspections, obtaining samples, and similar activities.

PART 2 - PRODUCTS (Not Used)

PART 3 - EXECUTION

3.01 REPAIR AND PROTECTION

A. On completion of testing, inspecting, sample taking, and similar services, repair damaged construction and restore substrates and finishes. Provide materials and comply with installation requirements specified in other Specification Sections or matching existing substrates and finishes. Restore patched areas and extend restoration into adjoining areas with durable seams that are as invisible as possible. Comply with Section 01 70 00 "Execution and Closeout Requirements" cutting and patching requirements.

B. Protect construction exposed by or for quality-control service activities. Repair and protection are Contractor's responsibility.

End of Section 01 40 00

SECTION 01 50 00 - TEMPORARY FACILITIES AND CONTROLS

PART 1 - GENERAL

1.01 SUMMARY

A. Section includes temporary utilities, support facilities, security and protection facilities.

B. Related Section: Section 01 10 00 "Summary."

1.02 REFERENCES

A. Associated General Contractors of America, Inc.:
   1. Manual of Accident Prevention in Construction.
   2. Managing the Risk of Mold in the Construction of Buildings.

B. National Fire Protection Agency (NFPA):
   1. NFPA 70-2008: National Electrical Code.
   2. NFPA 241-2004: Safeguarding Construction, Alteration, and Demolition Operations

C. Occupational Safety and Health Association (OSHA): 29 CFR 1926.

D. State of Arizona Industrial Commission: General Construction Safety Code.

1.03 USE CHARGES

A. Provide, install and remove temporary utilities as may be required during construction.

B. Provide sanitary, water and electrical utilities as required at Contractor's cost. Use of existing Owner's utilities is not allowed for this Project. Make all necessary arrangements with applicable utility companies. Show location on Temporary Facilities Site Plan submittal.
   1. Water: Haul in necessary potable water for construction use. Provide temporary water tank for storage of potable water as needed.
      a. Temporary Water Tank Size: Contractor's option.
      b. Location on Site at Contractor's option, with Owner's permission.
   2. Electrical: Coordinate with APS Power Company to provide transformer, service wiring, meter and temporary panels as necessary. Pay all installation and usage costs associated with temporary power.
      a. Temporary Electrical Power Capacity: At Contractor's option.
      b. Location on Site at Contractor's option, with Owner's permission.

3. Sanitary Facilities: Provide temporary toilets, wash facilities, and drinking water for use of construction personnel. Comply with requirements of authorities having jurisdiction for type, number, location, operation, and maintenance of fixtures and facilities.
   a. Temporary Sanitary Facilities Quantity: Provide at least minimum required by IBC 2006 International Plumbing Code for temporary facilities.
   b. Temporary Sanitary Facilities Location: Contractor's option, with Owner's permission.

C. Allow other entities to use temporary services and facilities without cost, including, but not limited to testing agencies, and authorities having jurisdiction.

1.04 INFORMATIONAL SUBMITTALS

A. Temporary Facilities Site Plan: Show temporary facilities, utility services and hookups, staging and construction parking. Owner reserves right to review and approval of locations of all temporary facilities.

1.05 QUALITY ASSURANCE

A. Electric Service: Comply with NECA, NEMA, and UL standards and regulations for temporary electric service. Install service to comply with NFPA 70.

B. Tests and Inspections: Arrange for authorities having jurisdiction to test and inspect each temporary utility before use. Obtain required certifications and permits.

C. Accessible Temporary Egress: Comply with applicable provisions in the U.S. Architectural & Transportation Barriers Compliance Board's ADA-ABA Accessibility Guidelines and ICC/ANSI A117.1.

1.06 PROJECT CONDITIONS

A. Temporary Use of Permanent Facilities: Engage installer of each permanent service to assume responsibility for operation, maintenance, and protection of each permanent service during its use as a construction facility before Owner's acceptance.

PART 2 - PRODUCTS

2.01 MATERIALS

A. Chain-Link Fencing: Provide separate and not touching Owner's existing perimeter fencing. Material is at Contractor's option, reuse of existing fencing material, recycled from previous job is acceptable as long fencing materials used meets Contractor's security requirements for Project.

B. Provide dust control adhesive-surface walk-off mats. Minimum 36 by 60 inches (914 by 1624 mm).

C. Insulation: Unfaced mineral-fiber blanket, manufactured from recycled cotton, glass, slag wool, or rock wool; with maximum flame-spread and smoke-developed indexes of 25 and 50, respectively.

2.02 TEMPORARY FACILITIES

A. Temporary Facilities: Field Offices, Storage and Fabrication Sheds.
   1. Prefabricated or mobile units with temperature controls, and adequate foundations.
   2. Locate where directed by Owner, subject to regulatory approval.
   3. Pay for necessary approvals and permits.
   4. Maintain Temporary Facilities in accordance with applicable regulatory requirements and professional appearance consistent with overall Site. If, in Owner's opinion, temporary facilities are not being properly maintained, Owner reserves the right to perform or cause to be performed whatever work the Owner feels is required to bring the temporary facilities into proper maintenance condition, with five days notice to Contractor.

B. Common-Use Field Office: Of sufficient size to accommodate needs of Owner, Architect, and construction personnel office activities and to accommodate Project Meetings. Keep office clean and orderly:
   1. Project-site Documents including:
      a. Complete Project Record Contract Documents set, for recording As-Built information.
      b. Copy of General Conditions and Conditions of the Contract.
      c. Copies of all approved Shop Drawings, Samples, and other submittals as well as copies of submittals in progress which have not yet been approved.
      d. Copies of regulatory requirements.

C. Storage and Fabrication Sheds: Provide sheds sized, furnished, and equipped to accommodate materials and equipment for construction operations. Store combustible materials apart from buildings.

D. Provide construction for temporary offices, shops, and sheds located within construction area or within 30 feet (9 m) of building lines that is noncombustible according to ASTM E 136. Comply with NFPA 241.

2.03 EQUIPMENT

A. Fire Extinguishers: Portable, UL rated; with class and extinguishing agent as required by locations and classes of fire exposures.

B. HVAC Equipment: Unless Owner authorizes use of permanent HVAC system, provide vented, self-contained, with individual space thermostatic control.
   1. Use of gasoline-burning space heaters, open-flame heaters, or salamander-type heating units is prohibited.
   2. Temporary Heating Units: Listed and labeled for type of fuel being consumed, by a testing agency acceptable to authorities having jurisdiction, and marked for intended use.
   3. Permanent HVAC System: If Owner authorizes use of permanent HVAC system for temporary use during construction, provide filter with MERV of 8 at each return air grille in system and remove at end of construction and clean HVAC system as required in Section 01 70 00 "Execution and Closeout Requirements". Provide new filters as required immediately prior to Project Closeout.

PART 3 - EXECUTION

3.01 INSTALLATION, GENERAL

A. Locate facilities where they will serve Project adequately and result in minimum interference with performance of the Work. Relocate and modify facilities as required by progress of the Work. Locate facilities to limit site disturbance.

B. Provide each facility ready for use when needed to avoid delay. Do not remove until facilities are no longer needed or are replaced by authorized use of completed permanent facilities.

3.02 SUPPORT FACILITIES INSTALLATION

A. Roads and Paved Areas: Maintain existing roads and paved areas allowed for construction operations. Locate temporary roads and paved areas within construction limits indicated on Drawings. Provide dust-control treatment that is nonpolluting and nontracking. Reapply treatment as required to minimize dust.

B. Traffic Controls: Comply with requirements of authorities having jurisdiction.
   1. Protect existing site improvements to remain including curbs, pavement, and utilities.
   2. Maintain access for fire-fighting equipment and access to fire hydrants.

C. Parking: Designate construction parking areas for construction personnel on Temporary Facilities Site Plan submittal. If designated area is insufficient to accommodate all construction vehicles, provide additional off-site parking as required. Owner's existing parking areas are reserved for Owner's use only throughout the life of construction, and shall not be used for any construction related purpose.

D. Dewatering Facilities and Drains: Comply with requirements of authorities having jurisdiction. Maintain Project site, excavations, and construction free of water.
   1. Dispose of rainwater in a lawful manner that will not result in flooding Project or adjoining properties nor endanger permanent Work or temporary facilities.
   2. Remove snow and ice as required to minimize accumulations.

E. Project Signs: Provide Project signs as indicated. Unauthorized signs are not permitted.

F. Waste Disposal Facilities: Provide waste-collection containers in sizes adequate to handle waste from construction operations. Comply with requirements of authorities having jurisdiction. Comply with Section 01 70 00 "Execution and Closeout Requirements" for *progress cleaning requirements.*

3.03 SECURITY AND PROTECTION FACILITIES INSTALLATION

A. Environmental Protection: Provide protection, operate temporary facilities, and conduct construction as required to comply with environmental regulations and that minimize possible air, waterway, and subsoil contamination or pollution or other undesirable effects.

B. Pest Control: Engage pest-control service to recommend practices to minimize attraction and harboring of rodents, roaches, and other pests and to perform extermination and control procedures at regular intervals so Project will be free of pests and their residues at Substantial Completion. Obtain extended warranty for Owner. Perform control operations lawfully, using environmentally safe materials.

C. Security Enclosure and Lockup: Install temporary enclosure around partially completed areas of construction. Provide lockable entrances to prevent unauthorized entrance, vandalism, theft, and similar violations of security. Lock entrances at end of each work day.

D. Barricades, Warning Signs, and Lights: Comply with requirements of authorities having jurisdiction for erecting structurally adequate barricades, including warning signs and lighting.

E. Temporary Egress: Maintain temporary egress from existing occupied facilities as indicated and as required by authorities having jurisdiction.

F. Temporary Fire Protection: Install and maintain temporary fire-protection facilities of types needed to protect against reasonably predictable and controllable fire losses. Comply with NFPA 241.
   1. Supervise welding operations, combustion-type temporary heating units, and similar sources of fire ignition according to requirements of authorities having jurisdiction.
   2. Develop and supervise an overall fire-prevention and -protection program for personnel at Project site. Review needs with local fire department and establish procedures to be followed. Instruct personnel in methods and procedures. Post warnings and information.
   3. Provide temporary standpipes and hoses for fire protection. Hang hoses with a warning sign stating that hoses are for fire-protection purposes only and are not to be removed. Match hose size with outlet size and equip with suitable nozzles.

3.04 MOISTURE AND MOLD CONTROL

A. Contractor's Moisture-Protection Plan: Avoid trapping water in finished work. Document visible signs of mold that may appear during construction.

B. Exposed Construction Phase: Before installation of weather barriers, when materials are subject to wetting and exposure and to airborne mold spores, protect as follows:
   1. Protect porous materials from water damage.
   2. Protect stored and installed material from flowing or standing water.
   3. Keep porous and organic materials from coming into prolonged contact with concrete.
   4. Remove standing water from decks. Keep deck openings covered or dammed.

C. Partially Enclosed Construction Phase: After installation of weather barriers but before full enclosure and conditioning of building, when installed materials are still subject to infiltration of moisture and ambient mold spores, protect as follows:
   1. Do not load or install drywall or other porous materials or components, or items with high organic content, into partially enclosed building.
   2. Keep interior spaces reasonably clean and protected from water damage.
   3. Periodically collect and remove waste containing cellulose or other organic matter.
   4. Discard or replace water-damaged material.
   5. Do not install material that is wet.
   6. Discard, replace or clean stored or installed material that begins to grow mold.
   7. Perform work in a sequence that allows any wet materials adequate time to dry before enclosing the material in drywall or other interior finishes.

D. Controlled Construction Phase of Construction: After completing and sealing of the building enclosure but prior to the full operation of permanent HVAC systems, maintain as follows:
   1. Control moisture and humidity inside building by maintaining effective dry-in conditions.
   2. Use permanent HVAC system to control humidity.
   3. Comply with manufacturer's written instructions for temperature, relative humidity, and exposure to water limits.
      a. Hygroscopic materials that may support mold growth, including wood and gypsum-based products, that become wet during the course of construction and remain wet for 48 hours are considered defective.
      b. Measure moisture content of materials that have been exposed to moisture during construction operations or after installation. Record daily readings over a forty-eight hour period. Identify materials containing moisture levels higher than allowed. Report findings in writing to Architect. Remove materials that can not be completely restored to their manufactured moisture level within 48 hours.

3.05 OPERATION, TERMINATION, AND REMOVAL

A. Supervision: Enforce strict discipline in use of temporary facilities. To minimize waste and abuse, limit availability of temporary facilities to essential and intended uses.

B. Maintenance: Maintain facilities in good operating condition until removal. Maintain operation of temporary enclosures, heating, cooling, humidity control, ventilation, and similar facilities on a 24-hour basis where required to achieve indicated results and to avoid possibility of damage.

C. Temporary Facility Changeover: Do not change over from using temporary security and protection facilities to permanent facilities until Substantial Completion.

D. Termination and Removal: Remove each temporary facility when need for its service has ended, when it has been replaced by authorized use of a permanent facility, or no later than Substantial Completion. Repair damaged Work, clean exposed surfaces, and replace construction that cannot be satisfactorily repaired.
   1. Materials and facilities that constitute temporary facilities are property of Contractor. Owner reserves right to take possession of Project identification signs.
   2. Remove temporary roads and paved areas not intended for or acceptable for integration into permanent construction. Where area is intended for landscape development, remove soil and aggregate fill that do not comply with requirements for fill or subsoil. Remove materials contaminated with road oil, asphalt and other petrochemical compounds. Repair or replace street paving, curbs, and sidewalks at temporary entrances, as required by authorities having jurisdiction.

E. At Substantial Completion, repair, renovate, and clean permanent facilities used during construction period. Comply with final cleaning requirements specified in Section 01 70 00 "Execution and Closeout Requirements."

End of Section 01 50 00

SECTION 01 60 00 - PRODUCT REQUIREMENTS

PART 1 - GENERAL

1.01 SUMMARY

A. Section includes administrative and procedural requirements for selection of products; delivery, storage, and handling; manufacturers' standard and special warranties; and comparable products.

1.02 PRODUCT DELIVERY, STORAGE, AND HANDLING

A. Deliver, store, and handle products using means and methods that prevent damage, deterioration, and loss, including theft and vandalism. Comply with manufacturer's written instructions.

B. Delivery and Handling:
   1. Schedule deliveries to minimize long-term storage on Site, and to prevent overcrowding.
   2. Ensure minimum holding time for items that are flammable, hazardous, easily damaged, or sensitive to deterioration, theft, and other losses.
   3. Deliver products in manufacturer's original sealed container or other packaging system, complete with manufacturer's labels and written instructions for handling, storing, unpacking, protecting, and installing.
   4. Inspect products on delivery to determine compliance with the Contract Documents and to determine that products are undamaged and properly protected.

C. Storage:
   1. Store products to allow for inspection and measurement of quantity or counting of units.
   2. Store materials in a manner that will not endanger Project structure.
   3. Store products that are subject to damage by the elements, under cover in a weathertight enclosure above ground, with ventilation adequate to prevent condensation.
   4. Store foam plastic from exposure to sunlight, except to extent necessary for period of installation and concealment.
   5. Comply with product manufacturer's written instructions for temperature, humidity, ventilation, and weather-protection requirements for storage.
   6. Protect stored products from damage and liquids from freezing.
   7. Provide secure location and enclosure at Project site for storage of materials and equipment.

1.03 PRODUCT WARRANTIES

A. Warranties specified in other Sections shall be in addition to, and run concurrent with, other warranties required by the Contract Documents. Manufacturer's disclaimers and limitations on product warranties do not relieve Contractor of obligations under requirements of the Contract Documents.
   1. Manufacturer's Warranty: Written warranty furnished by individual manufacturer for a particular product and specifically endorsed by manufacturer to Owner.
   2. Special Warranty: Written, required by Contract Documents to provide Owner specific rights.

B. Special Warranties: Written document that contains appropriate terms and identification, ready for execution. Refer to Technical Specification Sections. Sections for specific content requirements and particular requirements for submitting special warranties.
   1. Standard Form: Modified, properly executed to include Project-specific information.
   2. Specified Form: When specified forms are included with the Specifications, prepare written document using indicated form properly executed.

C. Comply with requirements in Section 01 70 00 "Execution and Closeout Requirements."

PART 2 - PRODUCTS

2.01 PRODUCT SELECTION PROCEDURES

A. Provide products that comply with Contract Documents, are undamaged and, unless otherwise indicated, are new at time of installation.
   1. Provide products complete with accessories, trim, finish, fasteners, and other items needed for a complete installation and indicated use and effect.
   2. Standard Products: If available, and unless custom products or nonstandard options are specified, provide standard products of types produced and used successfully in similar situations on other projects.
   3. Owner reserves the right to limit selection to products with warranties not in conflict with requirements of the Contract Documents.
   4. Where products are accompanied by the term "as selected," City/Architect will make selection.
   5. Descriptive, performance, and reference standard requirements in the Specifications establish salient characteristics of products.
   6. Or Equal: For products specified by name and accompanied by the term "or equal," or "or approved equal," or "or prior approved equal," comply with requirements in "Comparable Products" Article to obtain approval for use of an unnamed product.

B. Product Selection Procedures:
   1. Product: Where Specifications name a single manufacturer and product, provide the named product that complies with requirements. Comparable products or substitutions for Contractor's convenience will not be considered.
   2. Manufacturer/Source: Where Specifications name a single manufacturer or source, provide a product by named manufacturer or source in compliance with requirements. Comparable products or substitutions for Contractor's convenience will not be considered.
   3. Products:
      a. Restricted List: Where Specifications include list of manufacturers and products, provide one of the products listed that complies with requirements. Comparable products or substitutions for Contractor's convenience will not be considered, unless otherwise indicated.
      b. Nonrestricted List: Where Specifications include a list of names of available manufacturers and products, provide one of the products listed, or an unnamed product, that complies with requirements. Comply with requirements in "Comparable Products" Article for consideration of an unnamed product.
   4. Manufacturers:
      a. Where Specifications include a list of manufacturers' names, provide product by a manufacturer listed that complies with requirements. Comparable products or substitutions for Contractor's convenience will be considered, unless otherwise indicated. Comply with requirements in "Comparable Products" Article for consideration of unnamed manufacturer's product.

   5. Basis-of-Design Product: Where Specifications name a product, or refer to a product indicated on Drawings, and include a list of manufacturers, provide the specified or indicated product or a comparable product by one of the other named manufacturers. Drawings and Specifications indicate sizes, profiles, dimensions, and other characteristics that are based on the product named. Comply with requirements in "Comparable Products" Article for consideration of an unnamed product by one of the other named manufacturers.

C. Visual Matching Specification: Where Specifications require "match Architect's sample", provide a product that complies with requirements and matches City/Architect's sample. City/Architect's decision on whether a proposed product matches is final.

D. Visual Selection Specification: Where Specifications include the phrase "as selected by Architect from manufacturer's full range" or similar phrase, select a product that complies

with requirements. City/Architect will select color, gloss, pattern, density, or texture from manufacturer's product line that includes both standard and premium items.

2.02 COMPARABLE PRODUCTS

A. Conditions for Consideration: City/Architect will consider Contractor's request for comparable product when the following conditions are satisfied. If the following conditions are not satisfied, City/Architect may return requests without action, except to record noncompliance with these requirements:
   1. Evidence that proposed product does not require revisions to Contract Documents, is consistent with Contract Documents and will produce the indicated results, and it is compatible with other portions of the Work.
   2. Detailed comparison of significant qualities of proposed product with those named in the Specifications. Significant qualities include attributes such as performance, weight, size, durability, visual effect, and specific features and requirements indicated.
   3. Evidence that proposed product provides specified warranty.
   4. List of similar installations for completed projects with project names and addresses and names and addresses of architects and owners, if requested.
   5. Samples, if requested.

PART 3 - EXECUTION (Not Used)

End of Section 01 60 00

SECTION 01 70 00 – EXECUTION AND CLOSEOUT REQUIREMENTS

PART 1 - GENERAL

1.01 SUMMARY

A. Section includes general administrative and procedural requirements governing execution of Work.

B. Preparing operation and maintenance manuals, including:
   1. Operation manuals for systems, subsystems, and equipment.
   2. Product maintenance manuals.
   3. Manual Content: Operations and maintenance manual content is specified in individual specification sections to be reviewed at the time of Section submittals. Submit reviewed manual content formatted and organized as required by this Section. Where applicable, clarify and update reviewed manual content to correspond to modifications and field conditions.

C. Project Record Documents:
   1. Record Drawings.
   2. Record Specifications.
   3. Record Product Data.
   4. Miscellaneous record submittals.

PART 2 - PRODUCTS

2.01 MATERIALS

A. Cleaning Agents: Use cleaning materials and agents recommended by manufacturer or fabricator of the surface to be cleaned. Do not use cleaning agents that exceed allowable VOC limits, or that are potentially hazardous to health or property or that might damage finished surfaces.

2.02 REQUIREMENTS FOR OPERATION AND MAINTENANCE MANUALS

A. Organize each manual into separate sections for each system and subsystem. Provide separate section(s) for each piece of equipment not part of a system. Each manual shall contain:
   1. Title page and Table of Contents.
   2. Manual contents: Organize into sets of manageable size. Arrange contents alphabetically by system, subsystem, and equipment. If possible, assemble

instructions for subsystems, equipment, and components of one system into a single binder.

B. Operation Manuals: Include operation data required in individual Specification Sections.
   1. Systems and Equipment Controls: Describe sequence of operation and diagram controls.
   2. Piped Systems: Diagram piping as installed, identify color-coding required for identification.

C. Product Maintenance Manuals: Organize with separate sections for each product, material, finish:
   1. Source and Product Information.
   2. Reordering information for specially manufactured products.
   3. Maintenance Procedures: Manufacturer's written recommendations.
   4. Inspection procedures.
   5. Types of cleaning agents to be used and methods of cleaning. List of cleaning agents and methods of cleaning detrimental to product.
   6. Schedule for routine cleaning and maintenance.
   7. Repair instructions. Repair Materials Sources.
   8. Warranties and Bonds.

2.03 RECORD DRAWINGS (AS BUILT DRAWINGS)

A. Record Prints: Maintain one set of marked-up paper copies of Contract and Shop Drawings.
   1. Give particular attention to information on concealed elements that would be difficult to identify or measure and record later.
   2. Accurately record information in an acceptable drawing technique.
   3. Record data as soon as possible after obtaining it.
   4. Record and check the markup before enclosing concealed installations.
   5. Cross-reference record prints to corresponding archive photographic documentation.
   6. Content: Types of items requiring marking include, but are not limited to, the following:
      a. Dimensional changes to Drawings.
      b. Revisions to details shown on Drawings.
      c. Depths of foundations.
      d. Locations and depths of underground utilities.
      e. Revisions to routing of piping and conduits.
      f. Revisions to electrical circuitry.
      g. Actual equipment locations.
      h. Duct size and routing.
      i. Locations of concealed internal utilities.
      j. Changes made by Change Order or Construction Change Directive.

k. Changes made following Architect's written orders.
l. Details not on the original Contract Drawings.
m. Field records for variable and concealed conditions.
n. Record information on the Work that is shown only schematically.

7. Mark Contract Drawings and Shop Drawings completely and accurately. Utilize personnel proficient at recording graphic information in production of marked-up record prints.
8. Mark record sets with erasable, red-colored pencil. Use other colors to distinguish between changes for different categories of the Work at same location.
9. Mark important additional information that was either shown schematically or omitted from original Drawings.
10. Note Construction Change Directive numbers, alternate numbers, Change Order numbers, and similar identification, where applicable.

B. Format: Identify and date each record Drawing; include designation "PROJECT RECORD DRAWING" in a prominent location.

2.04 PROJECT RECORD DOCUMENTS

A. Mark Record Specifications to indicate the actual product installation where installation varies from that indicated in Specifications, addenda, and contract modifications.

B. Mark Record Product Data to indicate the actual product installation where installation varies substantially from that indicated in Product Data submittal.

C. Note related Change Orders on Record Specifications, and Record Drawings where applicable.

2.05 MISCELLANEOUS RECORD SUBMITTALS

A. Assemble miscellaneous records required by other Specification Sections for miscellaneous record keeping and submittal in connection with actual performance of the Work. Bind or file miscellaneous records and identify each, ready for continued use and reference.

B. Format: Submit miscellaneous record submittals as PDF electronic file, paper copy, scanned PDF electronic file(s) of marked up miscellaneous record submittals. Include miscellaneous record submittals directory organized by specification section number and title, electronically linked to each item of miscellaneous record submittals.

PART 3 - EXECUTION

3.01 EXAMINATION

A. Existing Conditions: The existence and location of underground and other utilities and construction indicated as existing are not guaranteed. Before beginning work, investigate and verify the existence and location of underground utilities, and other construction affecting the Work.
   1. Before construction, verify the location and invert elevation at points of connection of sanitary sewer, storm sewer, and water-service piping; underground electrical services, and other utilities.
   2. Furnish location data for work related to Project that must be performed by public utilities serving Project site.

B. Examination and Acceptance of Conditions: Before proceeding with each component of the Work, examine substrates, areas, and conditions, with Installer or Applicator present where indicated, for compliance with requirements for installation tolerances and other conditions affecting performance. Record observations.
   1. Written Report: Where a written report listing conditions detrimental to performance of the Work is required by other Sections, include:
      a. Description of the Work.
      b. List of detrimental conditions, including substrates.
      c. List of unacceptable installation tolerances.
      d. Recommended corrections.
   2. Verify compatibility with and suitability of substrates, including compatibility with existing finishes or primers.
   3. Examine roughing-in for mechanical and electrical systems to verify actual locations of connections before equipment and fixture installation.
   4. Examine walls, floors, and roofs for suitable conditions where products and systems are to be installed.
   5. Proceed with installation only after unsatisfactory conditions have been corrected. Proceeding with the Work indicates acceptance of surfaces and conditions.

3.02 PREPARATION

A. Existing Utility Information: Furnish information to local utility company(s) and City of Glendale Engineering Department that is necessary to adjust, move, or relocate existing utility structures, utility poles, lines, services, or other utility appurtenances located in or affected by construction. Coordinate with authorities having jurisdiction.

B. Field Measurements: Take field measurements as required to fit the Work properly. Recheck measurements before installing each product. Where portions of the Work are indicated to fit to other construction, verify dimensions of other construction by field measurements before fabrication. Coordinate fabrication schedule with construction progress to avoid delaying the Work.

C. Verify space requirements and dimensions of items shown diagrammatically on Drawings.

3.03 CONSTRUCTION LAYOUT

A. Verification: Before proceeding to lay out the Work, verify layout information shown on Drawings, in relation to the property survey and existing benchmarks. If discrepancies are discovered, notify Architect promptly.

B. Site Improvements: Locate and lay out site improvements, including pavements, grading, fill and topsoil placement, utility slopes, and rim and invert elevations.

C. Building Lines and Levels: Locate and lay out control lines and levels for structures, building foundations, column grids, and floor level, including those required for mechanical and electrical work. Transfer survey markings and elevations for use with control lines and levels. Level foundations from two or more locations.

D. Record Log: Maintain a log of layout control work. Record deviations from required lines and levels. Include beginning and ending dates and times of surveys, weather conditions, name and duty of each survey party member, and types of instruments and tapes used. Make the log available for reference by Architect.

3.04 INSTALLATION

A. Locate Work and components of Work accurately, in correct alignment and elevation, as indicated.
   1. Make vertical work plumb and make horizontal work level.
   2. Where space is limited, install components to maximize space available for maintenance and ease of removal for replacement.
   3. Conceal pipes, ducts, and wiring in finished areas, unless otherwise indicated.

B. Comply with manufacturer's written instructions and recommendations for installing products in applications indicated.

C. Install products at the time and under conditions that will ensure the best possible results. Maintain conditions required for product performance until Substantial Completion.

D. Conduct construction operations so no part of the Work is subjected to damaging operations or loading in excess of that expected during normal conditions of occupancy.

E. Tools and Equipment: Do not use tools or equipment that produce harmful noise levels.

F. Templates: Obtain and distribute to the parties involved templates for work specified to be factory prepared and field installed. Check Shop Drawings of other work to confirm that adequate provisions are made for locating and installing products to comply with indicated requirements.

G. Attachment: Provide blocking and attachment plates and anchors and fasteners of adequate size and number to securely anchor each component in place, accurately located and aligned with other portions of the Work. Where size and type of attachments are not indicated, verify size and type required for load conditions.
   1. Mounting Heights: Where mounting heights are not indicated, mount components at heights directed by Architect.
   2. Allow for building movement, including thermal expansion and contraction.
   3. Coordinate installation of anchorages. Furnish setting drawings, templates, and directions for installing anchorages, including sleeves, concrete inserts, anchor bolts, and items with integral anchors, that are to be embedded in concrete or masonry. Deliver such items to Project site in time for installation.

H. Joints: Make joints of uniform width. Where joint locations in exposed work are not indicated, arrange joints for the best visual effect. Fit exposed connections together to form hairline joints.

I. Use products, cleaners, and installation materials that are not considered hazardous.

3.05 CUTTING AND PATCHING

A. Cutting and Patching, General: Employ skilled workers to perform cutting and patching. Proceed with cutting and patching at the earliest feasible time, and complete without delay. Cut in-place construction to provide for installation of other components or performance of other construction, and subsequently patch as required to restore surfaces to their original condition.

B. Temporary Support: Provide temporary support of work to be cut.

C. Protection: Protect in-place construction during cutting and patching to prevent damage. Provide protection from adverse weather conditions for portions of Project that might be exposed during cutting and patching operations.

D. Cutting: Cut in-place construction by sawing, drilling, breaking, chipping, grinding, and similar operations, including excavation, using methods least likely to damage elements retained or adjoining construction. If possible, review proposed procedures with original Installer; comply with original Installer's written recommendations.

1. In general, use hand or small power tools designed for sawing and grinding, not hammering and chopping. Cut holes and slots neatly to minimum size required, and with minimum disturbance of adjacent surfaces. Temporarily cover openings when not in use.
2. Finished Surfaces: Cut or drill from the exposed or finished side into concealed surfaces.
3. Concrete and Masonry: Cut using a cutting machine, such as an abrasive saw or a diamond-core drill.
4. Excavating and Backfilling: Comply with requirements in Division 2 Sections where required by cutting and patching operations.
5. Proceed with patching after construction operations requiring cutting are complete.

E. Patch construction by filling, repairing, refinishing, closing up, and similar operations following performance of other work. Patch with durable seams that are as invisible as practicable. Provide materials and comply with installation requirements specified in other Sections, where applicable.
   1. Inspection: Where feasible, test and inspect patched areas after completion to demonstrate physical integrity of installation.
   2. Restore exposed finishes of patched areas and extend finish restoration into retained adjoining construction in manner to minimize evidence of patching and refinishing.
      a. Clean piping, conduit, and similar features before applying paint or finishing materials.
      b. Restore damaged pipe covering to its original condition.
   3. Floors and Walls: Where walls or partitions that are removed extend one finished area into another, patch and repair floor and wall surfaces in the new space. Provide an even surface of uniform finish, color, texture, and appearance. Remove in-place floor and wall coverings and replace with new materials, if necessary, to achieve uniform color and appearance.
      a. Where patching occurs in a painted surface, prepare substrate and apply primer and intermediate paint coats appropriate for substrate over the patch, and apply final paint coat over entire unbroken surface containing the patch. Provide additional coats until patch blends with adjacent surfaces.
   4. Ceilings: Patch, repair, or rehang in-place ceilings as necessary to provide an even-plane surface of uniform appearance.
   5. Exterior Building Enclosure: Patch components in a manner that restores enclosure to a weathertight condition.

F. Clean areas and spaces where cutting and patching are performed. Remove paint, mortar, oils, putty, and similar materials from adjacent finished surfaces.

3.06 PROGRESS CLEANING

A. Clean Project Site and work areas daily, including common areas. Enforce requirements strictly. Dispose of materials lawfully.
   1. Comply with NFPA 241 requirements for removal of combustible waste materials and debris.
   2. Do not hold waste materials more than seven days during normal weather or three days if the temperature is expected to rise above 80 deg F (27 deg C).
   3. Containerize hazardous and unsanitary waste materials separately from other waste. Mark containers appropriately and dispose of legally, according to regulations. Utilize containers intended for holding waste materials of type to be stored.
   4. Maintain Project Site free of waste materials and debris.

B. Clean areas where work is in progress to the level of cleanliness necessary for proper execution of the Work. Remove liquid spills promptly. Where dust would impair proper execution of the Work, broom-clean or vacuum the entire work area, as appropriate.

C. Installed Work: Keep installed work clean. Clean installed surfaces according to written instructions of manufacturer or fabricator of product installed, using only cleaning materials specifically recommended. If specific cleaning materials are not recommended, use cleaning materials that are not hazardous to health or property and that will not damage exposed surfaces.

D. Concealed Spaces: Remove debris from concealed spaces before enclosing the space.

E. Exposed Surfaces in Finished Areas: Clean exposed surfaces and protect as necessary to ensure freedom from damage and deterioration at time of Substantial Completion.

F. Waste Disposal: Do not bury or burn waste materials on-site. Do not wash waste materials into waterways.

G. During handling and installation, clean and protect construction in progress and adjoining materials already in place. Apply protective covering where required to ensure protection from damage or deterioration at Substantial Completion.

H. Clean and provide maintenance on completed construction as frequently as necessary through the remainder of the construction period. Adjust and lubricate operable components to ensure operability without damaging effects.

I. Limiting Exposures: Supervise construction operations to assure that no part of the construction completed or in progress, is subject to harmful, dangerous, damaging, or otherwise deleterious exposure during the construction period.

3.07 FINAL CLEANING

A. Perform final cleaning. Conduct cleaning and waste-removal operations to comply with local laws and ordinances and Federal and local environmental and antipollution regulations.

B. Cleaning: Complete the following cleaning operations before requesting inspection for certification of Substantial Completion:
   1. Clean Project site, yard, and grounds, in areas disturbed by construction activities, including development areas, of rubbish, waste material, litter, and other foreign substances.
   2. Sweep paved areas broom clean. Remove petrochemical spills, stains, and other foreign deposits.
   3. Rake grounds that are neither planted nor paved to a smooth, even-textured surface.
   4. Remove tools, construction equipment, machinery, surplus material from Project site.
   5. Clean exposed exterior and interior hard-surfaced finishes to a dirt-free condition, free of stains, films, and similar foreign substances. Avoid disturbing natural weathering of exterior surfaces. Restore reflective surfaces to their original condition.
   6. Remove debris and surface dust from limited access spaces, including roofs, plenums, shafts, trenches, manholes, attics, and similar spaces.
   7. Sweep concrete floors broom clean in unoccupied spaces.
   8. Vacuum carpet and similar soft surfaces, removing debris and excess nap; shampoo if visible soil or stains remain.
   9. Clean transparent materials, including mirrors and glass in doors and windows. Remove glazing compounds and other noticeable, vision-obscuring materials. Replace chipped or broken glass and other damaged transparent materials. Polish mirrors and glass, taking care not to scratch surfaces.
   10. Remove labels that are not permanent.
   11. Touch up and otherwise repair and restore marred, exposed finishes and surfaces. Replace finishes and surfaces that cannot be satisfactorily repaired or restored or that already show evidence of repair or restoration. Do not paint over "UL" and other required labels and identification, including mechanical and electrical nameplates.
   12. Wipe surfaces of mechanical and electrical equipment and similar equipment. Remove excess lubrication, paint and mortar droppings, and other foreign substances.
   13. Replace parts subject to operating conditions during construction that may impede operation or reduce longevity.
   14. Clean plumbing fixtures to a sanitary condition, free of stains, including stains resulting from water exposure.
   15. Replace disposable air filters and clean permanent air filters. Clean exposed surfaces of diffusers, registers, and grills.

16. Clean ducts, blowers, and coils if units were operated without filters during construction or that display contamination with particulate matter upon inspection.
17. Clean HVAC system in compliance with manufacturer's recommendations.
18. Clean light fixtures, lamps, globes, and reflectors to function with full efficiency. Replace burned-out bulbs, those noticeably dimmed by hours of use, and defective and noisy starters in fluorescent and mercury vapor fixtures to comply with requirements for new fixtures.
19. Leave Project clean and ready for occupancy.

C. Pest Control: Engage an experienced, licensed exterminator to make a final inspection and rid Project of rodents, insects, and other pests. Prepare a report.

D. Construction Waste Disposal: Comply with waste disposal requirements in Section 01 50 00 "Temporary Facilities and Controls."

3.08 MANUAL PREPARATION

A. Assemble complete sets of information indicating:
   1. Operation Manuals: Operation data indicating operation of each system, subsystem, and piece of equipment not part of a system.
   2. Product Maintenance Manual: Maintenance data indicating care and maintenance of each product, material, and finish incorporated into the Work.
   3. Manufacturers' Data: Where manuals contain manufacturers' standard printed data, include only sheets pertinent to product or component installed. Mark each sheet to identify each product or component incorporated into the Work. Identify data applicable to the Work and delete references to information not applicable.

B. Drawings: Prepare drawings supplementing manufacturers' printed data to illustrate relationship of component parts of equipment and systems and to illustrate control sequence and flow diagrams. Coordinate these drawings with information contained in record Drawings to ensure correct illustration of completed installation. Do not use original project record documents as part of operation and maintenance manuals.

3.09 RECORDING PROJECT RECORD DOCUMENTS AND MAINTENANCE

A. Recording: Maintain one copy of each submittal during the construction period for project record document purposes. Post changes and modifications to project record documents as they occur; do not wait until the end of Project.

B. Maintenance of Record Documents and Samples: Store record documents and Samples in the field office apart from the Contract Documents used for construction. Do not use project record documents for construction purposes. Maintain record documents in good

order and in a clean, dry, legible condition, protected from deterioration and loss. Provide access to project record documents for Architect's reference during normal working hours.

3.10 STARTING AND ADJUSTING

A. Coordinate startup and adjusting of equipment and operating components in accordance with manufacturer's recommendations and requirements.

B. Start equipment and operating components to confirm proper operation. Remove malfunctioning units, replace with new units, and retest.

C. Adjust equipment for proper operation. Adjust operating components for proper operation without binding.

D. Test each piece of equipment to verify proper operation. Test and adjust controls and safeties. Replace damaged and malfunctioning controls and equipment.

E. Manufacturer's Field Service: Comply with qualification requirements in Section 01 40 00 "Quality Requirements."

3.11 PROTECTION OF INSTALLED CONSTRUCTION

A. Provide final protection and maintain conditions that ensure installed Work is without damage or deterioration at time of Substantial Completion.

B. Comply with manufacturer's written instructions for temperature and relative humidity.

3.12 CORRECTION OF THE WORK

A. Repair or remove and replace defective construction. Restore damaged substrates and finishes. Repairing includes replacing defective parts, refinishing damaged surfaces, touching up with matching materials, and properly adjusting operating equipment.

B. Restore permanent facilities used during construction to their specified condition.

C. Remove and replace damaged surfaces that are exposed to view if surfaces cannot be repaired without visible evidence of repair.

D. Repair components that do not operate properly. Remove and replace operating components that cannot be repaired.

E. Remove and replace chipped, scratched, and broken glass or reflective surfaces.

End of Section 01 70 00

SECTION 08 51 13 - ALUMINUM WINDOWS

PART 1 - GENERAL

1 01 SUMMARY

A This Section includes fixed and operable aluminum-framed windows

B. The aluminum windows will be provided by the owner and install by the contractor.

1 02 QUALITY ASSURANCE

A Installer A qualified installer, approved by manufacturer to install manufacturer's products

PART 2 - EXECUTION

2 01 INSTALLATION

A. Comply with Drawings, Shop Drawings, and manufacturer's written instructions for installing windows, hardware, accessories, and other components

B Install windows level, plumb, square, true to line, without distortion or impeding thermal movement, anchored securely in place to structural support, and in proper relation to wall flashing and other adjacent construction

C Set sill members in bed of sealant or with gaskets, as indicated, for weathertight construction

D Install windows and components to drain condensation, water penetrating joints, and moisture migrating within windows to the exterior

E Separate aluminum and other corrodible surfaces from sources of corrosion or electrolytic action at points of contact with other materials

F Adjust operating sashes and ventilators, screens, hardware, and accessories for a tight fit at contact points and weather stripping for smooth operation and weathertight closure Lubricate hardware and moving parts

G Clean aluminum surfaces immediately after installing windows Avoid damaging protective coatings and finishes Remove excess sealants, glazing materials, dirt, and other substances.

H Clean factory-glazed glass immediately after installing windows. Comply with manufacturer's written recommendations for final cleaning and maintenance Remove nonpermanent labels, and clean surfaces

I Remove and replace glass that has been broken, chipped, cracked, abraded, or damaged during construction period

End of Section 08 51 13

SECTION 08 80 00 - GLAZING

PART 1 - GENERAL

1 01 SUMMARY

A Section includes replacement glazing for the bathroom windows with tempered obscure glazing

1 02 SUBMITTALS

A Product Certificates For glass and glazing products, from manufacturer

1 03 QUALITY ASSURANCE

A Glazing Publications Comply with published recommendations of glass product manufacturers and organizations below, unless more stringent requirements are indicated Refer to these publications for glazing terms not otherwise defined in this Section or in referenced standards
1 GANA Publications: GANA's "Glazing Manual "

B Safety Glazing Labeling Where safety glazing labeling is indicated, permanently mark glazing with certification label of the SGCC or another certification agency acceptable to authorities having jurisdiction. Label shall indicate manufacturer's name, type of glass, thickness, and safety glazing standard with which glass complies

1 04 DELIVERY, STORAGE, AND HANDLING

A Protect glazing materials according to manufacturer's written instructions.

1 05 FIELD CONDITIONS

A Environmental Limitations Do not proceed with glazing when ambient and substrate temperature conditions are outside limits permitted by glazing material manufacturers and when glazing channel substrates are wet from rain, frost, condensation, or other causes

PART 2 - PRODUCTS

2 01 PERFORMANCE REQUIREMENTS

A. Installed glazing systems shall withstand normal thermal movement and wind and impact loads (where applicable) without failure, including loss or glass breakage attributable to the following defective manufacture, fabrication, or installation; failure of sealants or gaskets to remain watertight and airtight, deterioration of glazing materials, or other defects in construction
1 Maximum Lateral Deflection For glass supported on all four edges, limit center-of-glass deflection at design wind pressure to not more than 1/50 times the short-side length or 1 inch (25 mm), whichever is less
2 Differential Shading· Design glass to resist thermal stresses induced by differential shading within individual glass lites

B Thermal Movements Allow for thermal movements from ambient and surface temperature changes acting on glass framing members and glazing components
1 Temperature Change 120 deg F (67 deg C), ambient, 180 deg F (100 deg C), material surfaces

2 02 GLASS PRODUCTS, GENERAL

A Thickness Where glass thickness is indicated, it is a minimum Provide glass lites in thicknesses as needed to comply with requirements indicated
1 Minimum Glass Thickness for Exterior Lites Not less than 6.0 mm

B Strength Where float glass is indicated, provide annealed float glass, Kind HS heat-treated float glass, or Kind FT heat-treated float glass as needed to comply with "Performance Requirements" Article Where heat-strengthened glass is indicated, provide Kind HS heat-treated float glass or Kind FT heat-treated float glass as needed to comply with "Performance Requirements" Article Where fully tempered glass is indicated, provide Kind FT heat-treated float glass

C Thermal and Optical Performance Properties Provide glass with performance properties specified, as indicated in manufacturer's published test data, based on procedures indicated below
1 For monolithic-glass lites, properties are based on units with lites 6 0 mm thick

2 03 GLASS PRODUCTS

A Fully Tempered Float Glass (Safety Glass) ASTM C 1048, KT Fully tempered, Type I; Quality-Q3; Class I (clear), of kind and condition indicated

B Fully Tempered Obscure Float Glass Privacy glazing through light diffusion and obscuration. Submit sample of obscure tempered glazing for review and verify style of obscure pattern matches existing
1 Locations· Provide obscure glazing for windows in Bathrooms

C Glass in Bathroom Windows Exterior lite Fully Tempered Clear within insulating-glass units, with low-E coating pyrolytic on second surface

2 04 GLAZING GASKETS

A Dense Compression Gaskets· Molded or extruded gaskets of profile and hardness required to maintain watertight seal, made from one of the following
1 Neoprene complying with ASTM C 864
2 EPDM complying with ASTM C 864
3 Silicone complying with ASTM C 1115
4 Thermoplastic polyolefin rubber complying with ASTM C 1115.

B Soft Compression Gaskets Extruded or molded, closed-cell, integral-skinned EPDM, silicone or thermoplastic polyolefin rubber gaskets complying with ASTM C 509, Type II, black, of profile and hardness required to maintain watertight seal
1 Application Use where soft compression gaskets will be compressed by inserting dense compression gaskets on opposite side of glazing or pressure applied by means of pressure-glazing stops on opposite side of glazing

C. Lock-Strip Gaskets Neoprene extrusions in size and shape indicated, fabricated into frames with molded corner units and zipper lock-strips, complying with ASTM C 542, black

2 05 GLAZING SEALANTS

A General·
1 Compatibility Provide glazing sealants that are compatible with one another and with other materials they will contact, including glass products, and glazing channel substrates, under conditions of service and application, as demonstrated by sealant manufacturer based on testing and field experience
2. Suitability Comply with sealant and glass manufacturers' written instructions for selecting glazing sealants suitable for applications indicated and for conditions existing at time of installation
3 VOC Content For sealants applied inside of the weatherproofing system shall not emit more than 250 g/L when calculated according to 40 CFR 59, Subpart D
4 Colors of Exposed Glazing Sealants White to match existing aluminum window frames

2 06 GLAZING TAPES

A Back-Bedding Mastic Glazing Tapes· Preformed, butyl-based, 100 percent solids elastomeric tape; nonstaining and nonmigrating in contact with nonporous surfaces, with or without spacer rod as recommended in writing by tape and glass manufacturers for application indicated, and complying with ASTM C 1281 and AAMA 800 for products indicated below
1 AAMA 806 3 tape, for glazing applications in which tape is subject to continuous pressure

B Expanded Cellular Glazing Tapes Closed-cell, PVC foam tapes, factory coated with adhesive on both surfaces; and complying with AAMA 800 for the following types
1 AAMA 810 1, Type 1, for glazing applications in which tape acts as the primary sealant
2 AAMA 810 1, Type 2, for glazing applications in which tape is used in combination with a full bead of liquid sealant

2 07 MISCELLANEOUS GLAZING MATERIALS

A General. Provide products of material, size, and shape complying with referenced glazing standard, requirements of manufacturers of glass and other glazing materials for application indicated, and with a proven record of compatibility with surfaces contacted in installation

B Cleaners, Primers, and Sealers Types recommended by sealant or gasket manufacturer

C Setting Blocks Elastomeric material with a Shore, Type A durometer hardness of 85, plus or minus 5.

D Spacers: Elastomeric blocks or continuous extrusions of hardness required by glass manufacturer to maintain glass lites in place for installation indicated.

E. Edge Blocks Elastomeric material of hardness needed to limit glass lateral movement (side walking)

F. Cylindrical Glazing Sealant Backing ASTM C 1330, Type O (open-cell material), of size and density to control glazing sealant depth and otherwise produce optimum glazing sealant performance.

2 08 FABRICATION OF GLAZING

A Fabricate glazing units in sizes required to fit openings indicated for Project, with edge and face clearances, edge and surface conditions, and bite complying with written instructions of product manufacturer and referenced glazing publications, to comply with system performance requirements.

PART 3 - EXECUTION

3 01 EXAMINATION

A Examine framing, glazing channels, and stops, with Installer present, for compliance with the following
1 Manufacturing and installation tolerances, including those for size, squareness, and offsets at corners
2 Presence and functioning of weep systems
3 Minimum required face and edge clearances
4 Effective sealing between joints of glass-framing members

B Proceed with installation only after unsatisfactory conditions have been corrected

3 02 PREPARATION

A Clean glazing channels and other framing members receiving glass immediately before glazing Remove coatings not firmly bonded to substrates

B Examine glazing units to locate exterior and interior surfaces Label or mark units as needed so that exterior and interior surfaces are readily identifiable Do not use materials that will leave visible marks in the completed work

3 03 GLAZING, GENERAL

A. Comply with combined written instructions of manufacturers of glass, sealants, gaskets, and other glazing materials, unless more stringent requirements are indicated, including those in referenced glazing publications

B. Adjust glazing channel dimensions as required by Project conditions during installation to provide necessary bite on glass, minimum edge and face clearances, and adequate sealant thicknesses, with reasonable tolerances

C Protect glass edges from damage during handling and installation Remove damaged glass from Project site and legally dispose of off Project site Damaged glass is glass with edge damage or other imperfections that, when installed, could weaken glass and impair performance and appearance.

D Apply primers to joint surfaces where required for adhesion of sealants, as determined by preconstruction testing

E. Install setting blocks in sill rabbets, sized and located to comply with referenced glazing publications, unless otherwise required by glass manufacturer. Set blocks in thin course of compatible sealant suitable for heel bead

F Do not exceed edge pressures stipulated by glass manufacturers for installing glass lites

G. Provide spacers for glass lites where length plus width is larger than 50 inches (1270 mm)
1 Locate spacers directly opposite each other on both inside and outside faces of glass. Install correct size and spacing to preserve required face clearances, unless gaskets and glazing tapes are used that have demonstrated ability to maintain required face clearances and to comply with system performance requirements
2 Provide 1/8-inch (3-mm) minimum bite of spacers on glass and use thickness equal to sealant width With glazing tape, use thickness slightly less than final compressed thickness of tape

H Provide edge blocking where indicated or needed to prevent glass lites from moving sideways in glazing channel, as recommended in writing by glass manufacturer and according to requirements in referenced glazing publications

I Set glass lites in each series with uniform pattern, draw, bow, and similar characteristics

J Set glass lites with proper orientation so that texture surfaces face exterior or interior as specified

3 04 TAPE GLAZING

A Position tapes on fixed stops so that, when compressed by glass, their exposed edges are flush with or protrude slightly above sightline of stops

B Install tapes continuously, but not necessarily in one continuous length Do not stretch tapes to make them fit opening

C Cover vertical framing joints by applying tapes to heads and sills first and then to jambs Cover horizontal framing joints by applying tapes to jambs and then to heads and sills

D Place joints in tapes at corners of opening with adjoining lengths butted together, not lapped. Seal joints in tapes with compatible sealant approved by tape manufacturer

E Do not remove release paper from tape until right before each glazing unit is installed.

F Apply heel bead of elastomeric sealant where required.

G Center glass lites in openings on setting blocks and press firmly against tape by inserting dense compression gaskets formed and installed to lock in place against faces of removable stops. Start gasket applications at corners and work toward centers of openings

3 05 GASKET GLAZING (DRY)

A. Cut compression gaskets to lengths recommended by gasket manufacturer to fit openings exactly, with allowance for stretch during installation

B Insert soft compression gasket between glass and frame or fixed stop so it is securely in place with joints miter cut and bonded together at corners

C Installation with Drive-in Wedge Gaskets Center glass lites in openings on setting blocks and press firmly against soft compression gasket by inserting dense compression gaskets formed and installed to lock in place against faces of removable stops Start gasket applications at corners and work toward centers of openings. Compress gaskets to produce a weathertight seal without

developing bending stresses in glass Seal gasket joints with sealant recommended by gasket manufacturer

D Installation with Pressure-Glazing Stops Center glass lites in openings on setting blocks and press firmly against soft compression gasket Install dense compression gaskets and pressure-glazing stops, applying pressure uniformly to compression gaskets Compress gaskets to produce a weathertight seal without developing bending stresses in glass Seal gasket joints with sealant recommended by gasket manufacturer.

E. Install gaskets so they protrude past face of glazing stops

3 06 LOCK-STRIP GASKET GLAZING

A Comply with ASTM C 716 and gasket manufacturer's written instructions. Provide supplementary wet seal and weep system unless otherwise indicated

3 07 CLEANING AND PROTECTION

A Protect exterior glass from damage immediately after installation by attaching crossed streamers to framing held away from glass Do not apply markers to glass surface. Remove nonpermanent labels and clean surfaces

B Protect glass from contact with contaminating substances resulting from construction operations If, despite such protection, contaminating substances do come into contact with glass, remove substances immediately as recommended in writing by glass manufacturer

C Examine glass surfaces adjacent to or below exterior concrete and other masonry surfaces at frequent intervals during construction, but not less than once a month, for buildup of dirt, scum, alkaline deposits, or stains, remove as recommended in writing by glass manufacturer

D Remove and replace glass that is broken, chipped, cracked, or abraded or that is damaged from natural causes, accidents, and vandalism, during construction period

E Wash glass on both exposed surfaces in each area of Project not more than four days before date scheduled for inspections that establish date of Substantial Completion. Wash glass as recommended in writing by glass manufacturer

End of Section 08 80 00

SECTION 09 21 16 - GYPSUM BOARD

PART 1 - GENERAL

1 01 SUMMARY

A Section includes interior gypsum board.

1 02 SUBMITTALS

A Product Data For each type of product indicated

1 03 STORAGE AND HANDLING

A Store materials inside under cover and keep them dry and protected against damage from weather, condensation, direct sunlight, construction traffic, and other causes Stack panels flat to prevent sagging

1 04 PROJECT CONDITIONS

A Environmental Limitations Comply with ASTM C 840 requirements or gypsum board manufacturer's written recommendations, whichever are more stringent

B Do not install panels that are wet, those that are moisture- or mold-damaged
1 Indications that panels are wet or moisture damaged include, but are not limited to, discoloration, sagging, or irregular shape
2 Indications that panels are mold damaged include, but are not limited to, fuzzy or splotchy surface contamination and discoloration

PART 2 - PRODUCTS

2 01 PANELS, GENERAL

A Size Provide in maximum lengths and widths available that will minimize joints in each area and that correspond with support system indicated

2 02 INTERIOR GYPSUM BOARD

A Comply with ASTM C 36/C 36M or ASTM C 1396/C 1396M, as applicable to type of gypsum board indicated and whichever is more stringent
1 Available Manufacturers Subject to compliance with requirements, manufacturers offering products that may be incorporated into the Work include, but are not limited to, the following
a American Gypsum Co
b G-P Gypsum
c National Gypsum Company
d PABCO Gypsum
e USG Corporation

f Or approved equal meeting requirements of this Section and use conditions.

B Regular Gypsum Board Use in Living and Dining area ceilings, and in other locations where Water Resistant GWB is not recommended or required
1. Thickness 1/2 inch
2 Long Edges· Tapered

C Water Resistant Gypsum Board. Use in Bathroom ceilings, and other locations where water is present.
1. Thickness· 1/2 inch.
2 Long Edges· Tapered

2 03 TRIM ACCESSORIES

A. Interior Trim ASTM C 1047
1 Material· Galvanized or aluminum-coated steel sheet, rolled zinc, plastic, or paper-faced galvanized steel sheet
2 Shapes·
a LC-Bead J-shaped, exposed long flange receives joint compound
b. L-Bead L-shaped, exposed long flange receives joint compound
c Expansion (control) joint

2 04 JOINT TREATMENT MATERIALS

A Comply with ASTM C 475/C 475M

B Joint Tape for Interior Gypsum Wallboard Paper

C Joint Compound for Interior Gypsum Wallboard For each coat use formulation that is compatible with other compounds applied on previous or for successive coats
1 Prefilling· At open joints, rounded or beveled panel edges, and damaged surface areas, use setting-type taping compound
2 Embedding and First Coat For embedding tape and first coat on joints, fasteners, and trim flanges, use setting-type taping compound
a Use setting-type compound for installing paper-faced metal trim accessories
3 Fill Coat For second coat, use setting-type, sandable topping compound
4 Finish Coat For third coat, use setting-type, sandable topping compound
5 Skim Coat For final coat of Level 5 finish, use high-build interior coating product designed for application by airless sprayer and to be used instead of skim coat to produce Level 5 finish

2 05 AUXILIARY MATERIALS

A Provide auxiliary materials that comply with referenced installation standards and manufacturer's written recommendations

B Steel Drill Screws· ASTM C 1002, unless otherwise indicated

C No adhesively applied gypsum board. Installation shall be by screw application to framing

D Gypsum Board Sealants: As specified in Section 07 90 00 "Joint Protection."

PART 3 - EXECUTION

3 01 EXAMINATION

A. Examine areas and substrates, with Installer present, and including welded hollow-metal frames and framing, for compliance with requirements and other conditions affecting performance

B Examine panels before installation Reject panels that are wet, moisture damaged, and mold damaged

C Proceed with installation only after unsatisfactory conditions have been corrected

3 02 APPLYING AND FINISHING PANELS, GENERAL

A Comply with ASTM C 840.

B Install ceiling panels across framing to minimize the number of abutting end joints and to avoid abutting end joints in central area of each ceiling Stagger abutting end joints of adjacent panels not less than one framing member

C Install panels with face side out Butt panels together for a light contact at edges and ends with not more than 1/16 inch (1 5 mm) of open space between panels Do not force into place.

D Locate edge and end joints over supports, except in ceiling applications where intermediate supports or gypsum board back-blocking is provided behind end joints Do not place tapered edges against cut edges or ends Stagger vertical joints on opposite sides of partitions Do not make joints other than control joints at corners of framed openings.

E Form control and expansion joints with space between edges of adjoining gypsum panels

F Attachment Framing Attach panels so leading edge or end of each panel is attached to open (unsupported) edges of stud first

G Single-Layer Application
1 On ceilings, apply gypsum panels before wall/partition board application to greatest extent possible and at right angles to framing, unless otherwise indicated
2 On partitions/walls, apply gypsum panels horizontally (perpendicular to framing), unless otherwise indicated, and minimize end joints Stagger abutting end joints not less than one framing member in alternate courses of panels
3 Fastening Methods. Apply gypsum panels to supports with steel drill screws

3 03 INSTALLING TRIM ACCESSORIES

A For trim with back flanges intended for fasteners, attach to framing with same fasteners used for panels Otherwise, attach trim according to manufacturer's written instructions

3 04 FINISHING GYPSUM BOARD

A General. Treat gypsum board joints, interior angles, edge trim, control joints, penetrations, fastener heads, surface defects, and elsewhere as required to prepare gypsum board surfaces for decoration Promptly remove residual joint compound from adjacent surfaces

B Prefill open joints, rounded edges, and damaged surface areas

C Apply joint tape over gypsum board joints, except those with trim having flanges not intended for tape

D Gypsum Board Finish Levels Finish to levels indicated below and according to ASTM C 840
1 Level 1 Ceiling plenum areas, concealed areas, and where indicated
2 Level 5 At panel surfaces that will be exposed to view, receiving finish of paint
a Primer and its application to surfaces are specified in 09 90 00 "Painting "

3 05 APPLYING TEXTURE FINISHES

A Surface Preparation and Primer Prepare and apply primer to gypsum panels and other surfaces receiving texture finishes Apply primer to surfaces that are clean, dry, and smooth

B Orange Peel Texture Finish Application. Mix and apply finish using powered spray equipment, to produce a uniform texture free of starved spots or other evidence of thin application or of application patterns

C Prevent texture finishes from coming into contact with surfaces not indicated to receive texture finish by covering them with masking agents, polyethylene film, or other means If, despite these precautions, texture finishes contact these surfaces, immediately remove droppings and overspray to prevent damage according to texture-finish manufacturer's written recommendations

3 06 PROTECTION

A Protect installed products from damage from weather, condensation, direct sunlight, construction, and other causes during remainder of the construction period

B Remove and replace panels that are wet, moisture damaged, and mold damaged.
1 Indications that panels are wet or moisture damaged include, but are not limited to, discoloration, sagging, or irregular shape
2 Indications that panels are mold damaged include, but are not limited to, fuzzy or splotchy surface contamination and discoloration

End of Section 09 21 16

SECTION 09 30 00 - TILING

PART 1 - GENERAL

A Section Includes Ceramic tile flooring **Note: Ceramic floor tile will be provided by the owner and complete installation of the floor tile will be provided by the contractor.**

B Related Section Section 07 90 00 "Joint Protection" for sealing of expansion, contraction, control, and isolation joints in tile surfaces

1 02 FIELD CONDITIONS

A. Environmental Limitations Do not install tile until construction in spaces is complete and ambient temperature and humidity conditions are maintained at the levels indicated in referenced standards and manufacturer's written instructions

PART 2 - PRODUCTS

2 01 PRODUCTS, GENERAL

A ANSI Ceramic Tile Standard Provide tile that complies with ANSI A137 1 for types, compositions, and other characteristics indicated
1. Provide tile complying with Standard grade requirements unless otherwise indicated

B ANSI Standards for Tile Installation Materials. Provide materials complying with ANSI A108 02, ANSI standards referenced in other Part 2 articles, ANSI standards referenced by TCA installation methods specified in tile installation schedules, and other requirements specified

C Factory Blending· For tile exhibiting color variations within ranges, blend tile in factory and package so tile units taken from one package show same range in colors as those taken from other packages and match approved Samples

2 02 TILE PRODUCTS

A Ceramic Floor Tile: From City of Glendale, 20 inch square tiles
1 Owner Furnished Tile
2. Composition Porcelain
3 Module Size 20 by 20 inches Thickness 5/16 inch
4 Face Textured
5. Surface Glazed
6. Tile Color and Pattern "Pinot-Ivory Gouges"
7. Grout Color "Brown"

2 03 CRACK ISOLATION MEMBRANE

A Manufacturer's standard product that complies with ANSI A118 12 for high performance and is recommended by manufacturer for application indicated Include reinforcement and accessories recommended by manufacturer

B Fabric-Reinforced, Fluid-Applied Membrane System consisting of liquid-latex rubber or elastomeric polymer and fabric reinforcement

2 04 SETTING MATERIALS

A Water-Cleanable, Tile-Setting Epoxy. ANSI A118 3, with a VOC content of 65 g/L or less when calculated according to 40 CFR 59, Subpart D (EPA Method 24)
1 Manufacturers Subject to compliance with requirements, available manufacturers offering products that may be incorporated into the Work include, but are not limited to, the following
a Basis of Design Custom Building Products
b Bostik, Inc
c. C-Cure
d MAPEI Corporation
e Or approved equal meeting requirements of this Section and use conditions
2 Provide product capable of withstanding continuous and intermittent exposure to temperatures of up to 140 deg F (60 deg C) and 212 deg F (100 deg C), respectively, and certified by manufacturer for intended use.

2 05 GROUT MATERIALS

A Water-Cleanable Sanded Epoxy Grout ANSI A118 3
1 Manufacturers Subject to compliance with requirements, available manufacturers offering products that may be incorporated into the Work include, but are not limited to, the following
a Basis of Design Custom Building Products
b Bostik, Inc
c C-Cure
d. MAPEI Corporation
e Or approved equal meeting requirements of this Section and use conditions
2. Provide product capable of withstanding continuous and intermittent exposure to temperatures of up to 140 deg F (60 deg C) and 212 deg F (100 deg C), respectively, and certified by manufacturer for intended use

2 06 INTERIOR CORNER JOINT SEALANT

A For Wall to Floor joints See Section 07 90 00 "Joint Protection "

2 07 MISCELLANEOUS MATERIALS

A Tile Cleaner A neutral cleaner capable of removing soil and residue without harming tile and grout surfaces, specifically approved for materials and installations indicated by tile and grout manufacturers

2 08 MIXING MORTARS AND GROUT

A Mix mortars and grouts to comply with referenced standards and mortar and grout manufacturers' written instructions Add materials, water, and additives in accurate proportions

B Obtain and use type of mixing equipment, mixer speeds, mixing containers, mixing time, and other procedures to produce mortars and grouts of uniform quality with optimum performance characteristics for installations indicated

PART 3 - EXECUTION

3 01 EXAMINATION

A Examine substrates, areas, and conditions where tile will be installed, with Installer present, for compliance with requirements for installation tolerances and other conditions affecting performance of installed tile
1 Verify that substrates for setting tile are firm, dry, clean, free of coatings that are incompatible with tile-setting materials including curing compounds and other substances that contain soap, wax, oil, or silicone, and comply with flatness tolerances required by ANSI A108 01 for installations indicated.
2 Verify that installation of grounds, anchors, recessed frames, electrical and mechanical units of work, and similar items located in or behind tile has been completed
3 Verify that joints and cracks in tile substrates are coordinated with tile joint locations, if not coordinated, adjust joint locations in consultation with Architect

B Proceed with installation only after unsatisfactory conditions have been corrected

3.02 PREPARATION

A Fill cracks, holes, and depressions in concrete substrates for tile floors installed with trowelable leveling and patching compound specifically recommended by tile-setting material manufacturer

B Blending For tile exhibiting color variations, verify that tile has been factory blended and packaged so tile units taken from one package show same range of colors as those taken from other packages and match approved Samples If not factory blended, either return to manufacturer or blend tiles at Project site before installing.

3 03 TILE INSTALLATION

A Comply with TCA's "Handbook for Ceramic Tile Installation" for TCA installation methods specified in tile installation schedules Comply with parts of the ANSI A108 Series "Specifications for Installation of Ceramic Tile" that are referenced in TCA installation methods, specified in tile installation schedules, and apply to types of setting and grouting materials used

B Extend tile work into recesses and under or behind cabinets, equipment, and fixtures to form complete covering without interruptions unless otherwise indicated. Terminate work neatly at obstructions, edges, and corners without disrupting pattern or joint alignments

C Accurately form intersections and returns Perform cutting and drilling of tile without marring visible surfaces Carefully grind cut edges of tile abutting trim, finish, or built-in items for straight aligned joints Fit tile closely to electrical outlets, piping, fixtures, and other penetrations so plates, collars, or covers overlap tile

D Jointing Pattern. Lay tile in grid pattern unless otherwise indicated Lay out tile work and center tile fields in both directions in each space or on each wall area Lay out tile work to minimize the use of pieces that are less than half of a tile Provide uniform joint widths unless otherwise indicated
1 Where adjoining room floor tiles are specified or indicated to be same size, align joints

E Joint Widths Unless otherwise indicated, install tile with the following joint widths.
1 Ceramic Tile ¼ inch

F Expansion Joints Provide sealant-filled joints where indicated Form joints during installation of setting materials, mortar beds, and tile Do not saw-cut joints after installing tiles
1 Where joints occur in concrete substrates, locate joints in tile surfaces directly above them
2 Prepare joints and apply sealants to comply with requirements in Section 079200 "Joint Sealants."

3 04 CRACK ISOLATION MEMBRANE INSTALLATION

A Install crack isolation membrane to comply with ANSI A108 17 and manufacturer's written instructions to produce membrane of uniform thickness and bonded securely to substrate

B Do not install tile or setting materials over crack isolation membrane until membrane has cured

3 05 CLEANING AND PROTECTING

A Cleaning On completion of placement and grouting, clean all ceramic tile surfaces so they are free of foreign matter.
1 Remove epoxy grout residue from tile as soon as possible
2 Clean grout smears and haze from tile according to tile and grout manufacturer's written instructions but no sooner than 10 days after installation. Use only cleaners recommended by tile and grout manufacturers and only after determining that cleaners are safe to use by testing on samples of tile and other surfaces to be cleaned. Protect metal surfaces and plumbing fixtures from effects of cleaning Flush surfaces with clean water before and after cleaning
3 Remove temporary protective coating by method recommended by coating manufacturer and that is acceptable to tile and grout manufacturer Trap and remove coating to prevent drain clogging

B Protect installed tile work with kraft paper or other heavy covering during construction period to prevent staining, damage, and wear If recommended by tile manufacturer, apply coat of neutral protective cleaner to completed tile walls and floors

C Prohibit foot and wheel traffic from tiled floors for at least seven days after grouting is completed

D Before final inspection, remove protective coverings and rinse neutral protective cleaner from tile surfaces.

3 06 INTERIOR TILE INSTALLATION SCHEDULE

A. Interior Floor Installations, Concrete Subfloor
1 Tile Installation F132. Water-cleanable, tile-setting epoxy on cured cement mortar bed installed over cleavage membrane, epoxy grout; TCA F132.
a Grout Water-cleanable epoxy grout

End of Section 09 30 00

SECTION 09 90 00 - PAINTING

PART 1 - GENERAL

1 01 SUMMARY

A Surface preparation and field application of paints and coatings on exposed interior walls, ceilings and surfaces

B Surface preparation and field application of paint systems on the following interior substrates
1 Concrete masonry units (CMU)
2 Gypsum board
3 Wood doors and trims.

C Painting and finishing of interior items and surfaces, unless otherwise indicated or specifically listed under an exclusion:
1 Finish items and surfaces which are normally painted and finished in a building and finished in buildings of this type and quality, shall be so finished
2 Paint exposed surfaces, except those specifically excluded.
3 Field painting of exposed interior plumbing, mechanical and electrical work, except finished surfaces
4 Paint exposed masonry, interior conditions that are exposed
5 Paint ceiling mounted items to match adjacent ceiling color
6. Factory finished materials and integrally colored materials shall not be painted
7 Factory primed materials shall be finish painted or coated per this Section.

D SSPC (PM1) – Steel Structures Painting Manual, Vol 1, Good Painting Practice, Society for Protective Coatings, Fourth Edition, where not excepted herein is hereby incorporated herein as minimum requirements of this Section

1 02 SUBMITTALS

A Product Data For each product, assembly and component Finish paints, coatings and primers Indicate special surface preparation procedures, substrate conditions requiring special attention, and product clean up recommendations

B Samples. Submit manufacturer's samples, illustrating full range of colors and gloss available for selection, for each finish paint product scheduled When color and gloss finish are scheduled, submit four samples, 6 inch by 6 inch in size illustrating color, or range of color, and gloss

1 03 INFORMATIONAL SUBMITTALS

A Paint Manufacturer's Instructions Indicate special surface preparation procedures, substrate conditions requiring special attention, and product clean up recommendations

1 04 QUALITY ASSURANCE

A Manufacturer Company specializing in manufacturing the Products specified in this section with minimum three years documented experience Applicator Company specializing in performing the work of this section approved by manufacturer

B. Coordinate with pre-primed materials, metals, masonry, and carpentry. Coordinate with color schedule

C Paint and Primers and Related Products
1 Conform to Volatile Organic Compound (VOC) regulations
2 Conform to flame spread, and smoke developed requirements for finishes
3 Conform to applicable regulations of the Environmental Protection Agency

1 05 FIELD CONDITIONS

A Comply with manufacturer recommendations for temperature and humidity ranges and requirements
1 Apply materials when surface and ambient temperatures are within recommended range
2 Do not apply when relative humidity exceeds 85 percent, or at temperatures less than 5 deg F (3 deg C) above the dew point, or to damp or wet surfaces, or when relative humidity is above manufacturer's recommended humidity range

B Apply waterborne paints only when temperatures of surfaces to be painted and surrounding air are between 50 and 90 deg F (10 and 32 deg C)

1 06 DELIVERY STORAGE AND HANDLING

A Deliver, store, protect and handle products to site, in sealed labeled containers, inspect to verify acceptability
1 Label Manufacturer's name, brand name, lot number, brand code, coverage, surface preparation, drying time, cleanup requirements, V O C compliance, color, and mix instructions.

B Store materials not in use in tightly covered containers in well-ventilated area at minimum ambient temperature of 45 deg F (7 deg C) and within temperature range as required by manufacturer's instructions Maintain storage containers in a clean condition, free of foreign materials and residue.

1 07 EXTRA MATERIALS

A Furnish extra paint materials from same production run as the materials applied and in quantities described below Package with protective covering for storage and identify with labels describing contents and location product was applied Deliver extra materials to Owner Provide 5 percent, but not less than 5 gallons in sealed, unopened manufacturer labeled containers, as appropriate, of each material and color applied

PART 2 - PRODUCTS

2 01 MANUFACTURERS

A Manufacturers· Subject to compliance with requirements, provide products by one of the following
1 Basis of Design Frazee Paint
2 Or approved equal meeting requirements of this Section and use conditions

B Paint products and colors listed are Frazee Phoenician White products unless noted otherwise Custom colors may be required for exact color match Use products of manufacturer listed.

Provide principal materials by one manufacturer, assemblies by one manufacturer, or approved by finish coat manufacturer Products by listed manufacturers are subject to compliance with requirements.

2 02 PAINT MATERIALS, GENERAL

A Paints used in interior locations must not emit more VOCs than 150 g/l for non-flat paints

B Material Compatibility Provide block fillers, primers, and finish-coat materials that are compatible with one another and with the substrates indicated under conditions of service and application, as demonstrated by manufacturer based on testing and field experience

C Material Quality Provide manufacturer's best-quality paint material of the various coating types specified that are factory formulated and recommended by manufacturer for application indicated Paint-material containers not displaying manufacturer's product identification will not be acceptable

D Colors Match samples Provide ready mixed, ready tinted paints, coatings and stains.

2 03 PREPARATORY COATS

A Interior Primer
1 Interior 100 percent Acrylic primer of finish coat manufacturer and recommended in writing by manufacturer for use with finish coat and on substrate indicated
2 Interior Gypsum Board Primer Frazee Primer
3 Where manufacturer does not recommend a separate primer formulation on substrate indicated, use paint specified for finish coat

B Touch Up and Fastener Coating Materials Match specified paint and primer Provide putty, spackle, shellac, thinners and other materials not specified but required to achieve finish as recommended by manufacturer of paint or coating material

2.04 FINISHING COATING OF MECHANICAL AND ELECTRICAL EQUIPMENT

A Do not paint equipment and items that have a shop or factory applied finish coating, except when so requested by the Architect (Primer is not a finish coating) Field touch-up blemishes to original finish

B Touch-up coating Provide touch-up coatings. Match shop applied coating in color and gloss Touch up so that touched-up work is undistinguishable from field coated finish work

2 05 DISSIMILAR MATERIALS IN CONTACT

A Dissimilar materials in contact Where dissimilar materials are in contact, provide and install appropriate separation of materials

PART 3 - EXECUTION

3 01 GENERAL

A Surface Preparation· Clean and prepare surfaces to be painted according to manufacturer's written instructions for each particular substrate condition and as specified
1 Inspection, moisture tests, preparation, application, field control, cleaning, workmanship, completion, and acceptance in accordance with reference Specifications and manufacturer's recommendations
2 Provide barrier coats over incompatible primers or remove and reprime
3 Cementitious Materials Remove efflorescence, chalk, dust, dirt, grease, oils, and release agents Roughen as required to remove glaze If hardeners or sealers have been used to improve curing, use mechanical methods of surface preparation
4 Back-prime rough carpentry items noted in Carpentry Division All surfaces after all cuts are made and before installing

B Correct defects and clean surfaces

C Protect surroundings and finished surfaces from damage during coating application.

D Prepare surface as recommended by manufacturer for substrate type

E Lightly sand surfaces to be painted when indicated

F Remove or mask electrical plates, hardware, trim, escutcheons, and fittings prior to preparing surfaces or applying finish coatings

G Material Preparation
1 Maintain containers used in mixing and applying paint in a clean condition, free of foreign materials and residue
2 Stir material before application to produce a mixture of uniform density. Stir as required during application Do not stir surface film into material If necessary, remove surface film and strain material before using
3 Coatings Provide ready mixed, except field catalyzed coatings
4 Process pigments to a soft paste consistency, capable of being readily and uniformly dispersed to a homogeneous coating, good flow and brushing properties, capable of drying or curing free of streaks or sags

3 02 APPLICATION

A General
1 Feather edges to make touch-up patches inconspicuous
2 Prime bare steel surfaces
3 Provide finishes free from dust, whirls, under spray, drips, or unintended discolorations

B. Typical Method Brush or roller Spray only where specified or approved specifically by coating manufacturer as acceptable method of application
1 Application Procedures Apply paints and coatings by brush, roller, spray, or other applicators according to manufacturer's written instructions

C Provide minimum coverage
1 Minimum Coating Thickness Apply paint materials no thinner than manufacturers' recommended spreading rate. Provide total dry film thickness of the entire system as

recommended by manufacturer Provide minimum mil thickness as recommended by manufacturer as required to cover
2 Multiple Coats Establish method to verify number of coats and mil thicknesses applied
3 Apply additional finish coats when color, stain, dirt, undercoats, or abuse show through or mar finish

D Provide uniformity in sheen, color, and texture

E. Exposed Surfaces Locations indicated on the Drawings Coating shall include elements listed, and other exposed to the air equipment and appurtenances of similar nature requiring painting Include areas visible when permanent or built-in fixtures, grilles, convector covers, covers for finned-tube radiation, and similar components are in place Extend coatings in these areas, as required, to maintain system integrity and provide desired protection
1 Paint surfaces behind movable equipment and furniture the same as similar exposed surfaces Before final installation of equipment, paint surfaces behind permanently fixed equipment or furniture with prime coat only
2 Paint interior surfaces of ducts with a flat, non-specular black paint where visible through registers or grilles
3 Paint back sides of access panels and removable or hinged covers to match exposed surfaces
4. Finish exterior doors on tops, bottoms, and side edges the same as exterior faces
5 Mechanical and Electrical Work Painting of mechanical and electrical work is limited to items exposed in equipment rooms and occupied spaces. Paint exposed mechanical and electrical work, except finished fixtures
6 Paint scheduled or normally painted surfaces and items unless noted as not painted
7 Ceiling-mounted items Match ceiling

F Sand lightly between each succeeding coat

3 03 PAINTING

A Paint Color schedule for items and colors is shown in the Drawings Colors selected are indicated on the Drawings

B Scheduling Painting. Apply first coat to surfaces that have been cleaned, pretreated, or otherwise prepared for painting as soon as practicable after preparation and before subsequent surface deterioration
1 Omit primer over metal surfaces that have been shop primed and touchup painted
2 If undercoats, stains, or other conditions show through final coat of paint, apply additional coats until paint film is of uniform finish, color, and appearance.

C Prime Coats Before applying finish coats, apply a prime coat, as recommended by manufacturer, to material that is required to be painted or finished and that has not been prime coated by others Recoat primed and sealed surfaces where evidence of suction spots or unsealed areas in first coat appears, to ensure a finish coat with no burn-through or other defects due to insufficient sealing

D. Pigmented (Opaque) Finishes Completely cover surfaces as necessary to provide a smooth, opaque surface of uniform finish, color, appearance, and coverage Cloudiness, spotting, holidays, laps, brush marks, runs, sags, ropiness, or other surface imperfections will not be acceptable.

E Coordinate coating application work with equipment installation

3 04 COLOR SCHEDULE

A Final Color Schedule for items and colors will be provided after receiving all submittals and samples

B Gloss Defined as having the following gloss level percentages based on a 60 degree meter
1 Flat 0 -9%
2 Low Sheen 10-25%
3 Eggshell 26-40%
4 Semi-Gloss 41-69%
5 Gloss 70-89%

3 05 CLEANING AND PROTECTING

A At the end of each workday, remove empty cans, rags, rubbish, and other discarded paint materials Collect waste material which may constitute a fire hazard, place in closed metal containers and remove from Project Site Dispose of collected waste materials legally

B Provide "Wet Paint" signs to protect newly painted finishes After completing painting operations, remove temporary protective wrappings provided by others to protect their work
1 After work of other trades is complete, touch up and restore damaged or defaced painted surfaces Comply with procedures specified in PDCA P1

C Clean coated metals as recommended by finish coating manufacturer

D Protect work of other trades, whether being painted or not, against damage from painting Correct damage by cleaning, repairing or replacing, and repainting, as approved by Architect

E Coordinate completion and clean up of Work of separate Sections in preparation for Substantial Completion and Final Completion

3 06 EXTRA MATERIALS

A Provide extra materials to Owner in good condition, with manufacturer's labels and original packing materials intact, unopened and sealed, as directed by the Architect

B Label each container with manufacturer's label noting color, type, texture, and locations of coating

C. Document delivery with written receipt signed by Owner's Representative

D INTERIOR COATING SCHEDULE Frazee Paint products listed, unless noted otherwise Color "Phoenician White"

E. Gypsum Board (Ceilings and Walls)), 100 percent Acrylic, Zero VOC SEMI-GLOSS
1st Coat (1 5 mils d f t) Frazee 061 "Aqua Seal II"
2nd Coat (1 5 mils d f t) Frazee 032 "Envirokote SG"
3rd Coat (1 5 mils d f t) Frazee 032 "Envirokote SG"

Final coat Frazee "Phoenician White-Semi Gloss"

F Wood Trim, Louvers, HVAC Grilles SEMI GLOSS
1st Coat Frazee 561 Acrylic Metal Primer
2nd Coat Frazee 032 "Envirokote SG"

3rd Coat Frazee 032 "Envirokote SG"
Final Coat. Frazee " Phoenician White – Semi Gloss"

End of Section 09 90 00

SECTION 10 21 16 – TUB-SHOWER ENCLOSURES

PART 1 - GENERAL

1 01 SUMMARY

A Section Includes Bathtub and Tub-Shower enclosures.

PART 2 - PRODUCTS

2 01 TUB-SHOWER SURROUND

A Basis-of-Design Product ½" thick Cultured Marble Panels sized for minimum number of joints only in corners and surrounding existing window, with double bull nose window sill
1 Heavy-gauge, 3-piece design, 3 attached shelves for storage, overlapping corners with recommended sealants for watertight seal
2 Color White
3 Extend marble panels to top of window on all three (3) panels
4 Extend marble panels 3" – 4" past tub and to the floor

2 02 BATHTUB

A Basis-of-Design Product. American Standard Princeton™ Recess Bath in Americast® brand engineered material, for above floor rough installation, white color See also, 224000 2 02 A
1 Model Series 2392 202 020, in left hand or right hand outlet, as indicated on Drawings
2 Compliance Certifications Meets or exceeds requirements listed below and/or those listed in Section 220000 – Plumbing Fixtures in those specifications
a ASME A112 19 4 for Americast Plumbing Fixtures
b ASTM F462 for Slip Resistant Bathing Facilities
c AMSI Z124 1 Ignition Test
d ASTM E162 for Flammability
e NFPA 258 for Smoke Density

PART 3 - EXECUTION

3 01 INSTALLATION

A Install according to manufacturers' written instructions, using recommended installation method and materials Install units level, plumb, and firmly anchored in locations and at heights indicated

3 02 CLEANING

A Remove temporary labels and protective coatings

B Clean and polish exposed surfaces according to manufacturer's written recommendations

End of Section 10 21 16

SECTION 10 21 20 – BATHROOM ACCESSORIES

PART 1 - GENERAL

1 01 SUMMARY

A Section Includes Bathroom accessories

1 02 QUALITY ASSURANCE

A Source Limitations For products listed together in the same Part 2 articles, obtain products from single source from single manufacturer

1 03 COORDINATION

A Coordinate accessory locations with other work to prevent interference with clearances required for access by people with disabilities, and for proper installation, adjustment, operation, cleaning, and servicing of accessories

PART 2 - PRODUCTS

2 01 MATERIALS

A Fasteners Screws, bolts, and other devices of same material as accessory unit and tamper-and-theft resistant where exposed, and of galvanized steel where concealed

B Chrome Plating ASTM B 456, Service Condition Number SC 2 (moderate service)

2 02 ACCESSORIES

A Basis-of-Design Product Franklin Brass Futura Chrome series
1 Toilet Paper Roll Holder D2408
2 Towel Bar 18-inch long D2418
3. Towel Bar 30-inch long. D2430
4 Subject to compliance with requirements, provide product indicated on Drawings or comparable product by
a A & J Washroom Accessories, Inc
b American Specialties, Inc
c Bradley Corporation
d GAMCO Specialty Accessories, a division of Bobrick Washroom Equipment, Inc

B Medicine Cabinet
1 Above pedestal vanity sink Basis-of-Design Product Zenith Products Corp M1215
2 Mounting Recessed or surface mount Shown in Drawings
3 Frameless with bevel edge on mirror, swing open door, two adjustable shelves
4 Secured to concealed wall hanger with theft-resistant locking device.

C. Shower Curtain Rod
   1 Basis-of-Design Product Zenith Products Corp "Twist Tight" Model 804SS, Part JW115OE, chrome 72-inch long tension shower curtain rod
   2 Mounting Mount centerline of shower curtain rod 2-inches below top edge of tub surround
   3 Secured to tub surround by twisting rod securely in place

2 03 FABRICATION

A Fabricate units with tight seams and joints, and exposed edges rolled

B Equip units for concealed anchorage and with corrosion-resistant backing plates

PART 3 - EXECUTION

3 01 INSTALLATION

A Install accessories according to manufacturers' written instructions, using fasteners appropriate to substrate indicated and recommended by unit manufacturer Install units level, plumb, and firmly anchored in locations and at heights indicated

3 02 ADJUSTING AND CLEANING

A Remove temporary labels and protective coatings

B Clean and polish exposed surfaces according to manufacturer's written recommendations

End of Section 10 21 20

SECTION 22 40 00 – PLUMBING FIXTURES

PART 1 - GENERAL

1 01 SUMMARY

A Includes labor, materials and equipment necessary for installation of plumbing fixtures as indicated and as described herein Install and deliver fixtures in perfect working order
1 Install fixtures and make required sanitary plumbing, waste and vent system connections to existing plumbing lines and sewer
2 Supervision of erection, balancing and adjustments and instructions for proper operations and maintenance
3 Sterilization of potable water system
4. Drawings are diagrammatic and do not show necessary offsets and bends that may be required Field verify location of existing plumbing lines, drains, and related plumbing items

1 02 DEFINITIONS

A Existing to Remain Existing plumbing lines, connections, fixtures, drains, and other plumbing related items of construction that are not to be removed and that are not otherwise indicated to be removed, removed and salvaged, or removed and reinstalled

B ABS Acrylonitrile-butadiene-styrene plastic

C FRP Fiberglass-reinforced plastic

D PMMA Polymethyl methacrylate (acrylic) plastic

E PVC Polyvinyl chloride plastic

F Solid Surface Nonporous, homogeneous, cast-polymer-plastic material with heat-, impact-, scratch-, and stain-resistance qualities

1 03 SUBMITTALS

A Where equipment submitted requires space other than is shown on drawings, large scale drawings showing floor space and service clearance shall be submitted for approval before ordering of equipment

1 04 QUALITY ASSURANCE

A Materials, apparatus, equipment and installation required for Work included in this Section shall be designed to comply with and shall be installed in accordance with requirements of City of Glendale Building and Plumbing Codes and Ordinances, including State and County Laws, Rules and Regulations of National Board of Fire Underwriters, International Building Code, American Society for Testing Materials, ASHRAE Guide, National Sanitation Foundation and International Plumbing Code Pressure vessels shall be ASME Code constructed and stamped

B Test soil, waste, vent, water, air and/or gas piping systems, and obtain approval of Architect Furnish equipment required for tests

C Regulatory Requirements Comply with requirements in Public Law 102-486, "Energy Policy Act," about water flow and consumption rates for plumbing fixtures

D NSF Standard Comply with NSF 61, "Drinking Water System Components--Health Effects," for fixture materials that will be in contact with potable water

E Select combinations of fixtures and trim, faucets, fittings, and other components that are compatible

F Comply with following applicable standards and other requirements specified for plumbing fixtures
1 Solid-Surface-Material Pedestal Lavatories and Sinks ANSI/ICPA SS-1
2 Enameled, Cast-Iron Fixtures ASME A112 19 1M
3 Vitreous-China Fixtures ASME A112 19 2M
4 Porcelain-Enameled, Formed-Steel Fixtures ASME A112 19 4M
5 Slip-Resistant Bathing Surfaces ASTM F 462

G Comply with the following applicable standards and other requirements specified for lavatory and sink faucets.
1 Backflow Protection Devices for Faucets ASME A112 18 3M
2 Faucets ASME A112 18 1
3 Hose-Connection Vacuum Breakers ASSE 1011
4 Hose-Coupling Threads ASME B1 20 7
5 Integral, Atmospheric Vacuum Breakers ASSE 1001
6 NSF Potable-Water Materials NSF 61
7 Supply Fittings ASME A112 18 1
8 Brass Waste Fittings ASME A112 18 2

H Comply with the following applicable standards and other requirements specified for bathtub/shower and faucets
1 Backflow Protection Devices for Hand-Held Showers ASME A112 18 3M
2 Faucets ASME A112 18 1
3 High-Temperature-Limit Controls for Thermal-Shock-Preventing Devices ASTM F 445
4 Hose-Coupling Threads ASME B1 20 7
5 Pressure-Equalizing-Control Antiscald Faucets ASTM F 444 and ASSE 1016
6 Thermostatic-Control Antiscald Faucets ASTM F 444 and ASSE 1016

I Comply with the following applicable standards and other requirements specified for miscellaneous fittings and components
1 Plastic Tubular Fittings ASTM F 409
2 Flexible Water Connectors ASME A112 18 6
3 Off-Floor Fixture Supports ASME A112 6 1M
4 Plastic Toilet Seats ANSI Z124 5
5 Pipe Threads. ASME B1 20 1

1 05 PLUMBING TESTS

A Inspection and Testing Notification Comply with procedures in latest adopted and/or amended Plumbing Code or local requirements, whichever are more restrictive on Inspection and Testing Notify local Administrative Authority at least 24 hours in advance of Work to be inspected
1 Retesting of Underground Piping Where piping systems (water, waste & vent, etc) are buried under floor slabs, concrete, or asphalt paving, test piping systems prior to beginning Work, and retest piping systems prior to completion of Work of this Section Notify Architect at least 24 hours before retest is performed so that test can be observed by Architect

2 Sanitary Waste Plug necessary openings in entire venting system to permit system to be filled and tested with water in sections 12 to 14 ft in height System must hold this water for 4 hours without showing a drop greater than 4" Where a portion of system is to be tested, conduct test in same manner as described for entire system, except that a vertical stack 10 ft above highest horizontal line to be tested may be installed and filled with water to maintain sufficient pressure

3. Water System Test Upon completion of roughing-in and before setting fixtures or installing insulation, test entire hot and cold water piping systems at hydrostatic pressure of not less than 100 lbs per square inch gauge, and prove tight at this pressure for not less than 4 hours in order to permit inspection of joints Where a portion of water piping system is to be concealed, before completion, test this portion separately in same manner as described for entire system

B. Defective Work If inspection or test shows defects, replace such defective work or material and repeat inspection and tests Make repairs to piping with new material No caulking or screwed joints or holes will be acceptable

1 06 MAINTENANCE MANUALS & RECORD DRAWINGS

A Prior to completion, per Section 01 70 00 – Execution and Closeout Requirements
1 Compile an Equipment list for inclusion in Operation and Maintenance Manual
2 Prior to Final Payment, prepare and submit Record Drawings

PART 2 - PRODUCTS

2 01 FAUCETS

A Bath Lavatory Basis-of-Design Product Glacier Bay 4-inch Center Faucet, in White.

B Bathtub/Shower Basis-of-Design Product Delta Faucet 4-inch spread
1. Model No TI3420 with knob in the next line
2 Classic Tub/Shower lever knob
3 EZ Touch Bath Drain in chrome trim

2 02 BATHTUB

A Bathtub Basis-of-Design Product American Standard Princeton ™ Recess Bath
1 Americast ® Tub, Model No 2393 202 020 with integral apron, in White.

2 03 WATER CLOSET (TOILET)

A Toilet Basis-of-Design Product American Standard·
1 Model No 3378 120 020, elongated, in White.
2 Toilet Seat· Elongated Bemis enameled wood to fit shape and model of toilet, 2 piece with mounting bolts and hinges, in White Model No 1520 EC

2 04 PEDESTAL LAVATORY

A Pedestal Lavatory and Pedestal Leg Basis-of-Design Product Glacier Bay, Shelburne, 4 VC Model No F-3004VV, in White

PART 3 - EXECUTION

3 01 PREPARATION

A When unanticipated mechanical, electrical, or structural elements conflict with intended function or design of plumbing fixtures are encountered, investigate and measure the nature and extent of conflict Promptly submit a written report to Architect

B. Cut existing work as necessary to properly install Work Structural members shall not be cut without written consent of Architect
1 Cutting of walls, floors, ceilings, and roof to accommodate piping, etc , see Section 02 01 00 – Maintenance of Existing Conditions Determine exact locations and size of each opening required to accommodate equipment, with Architect's approval. Furnish sleeves, caps and flashings, required to fill or close openings Provide final grouting and concrete fill, if required.
2 Core drill openings for piping Where drilling of existing concrete slab is required to accommodate the Work of this Section, provide Termite Control in accordance with Section 31 17 13 – Termite Control
3 Jackhammers or equipment producing excessive noise shall not be used, unless authorized in writing by both Architect and Owner
4 Perform necessary excavation, shoring, and back filling required for proper laying of pipes inside building, and outside as otherwise directed by Architect
5 Excavate trenches open cut, keep trench banks as nearly vertical as practicable. Excavate trenches true to line and make bottoms not less than 18" wide but no wider than necessary to provide ample work room. Grade trench bottoms accurately and by hand work only Do not cut any trench near or under footings without first consulting Architect

C Pipe Sleeves Provide pipe sleeves for piping through floors and walls. Fit pipe passing through masonry walls with steel or cast iron pipe sleeves

D Sleeves to have a minimum of 1/4" clearance between sleeve and service pipe or be not less than two sizes larger than service pipe.

3 02 INSTALLATION

A Assemble plumbing fixtures, trim, fittings, and other components according to manufacturers' written instructions.

B Install off-floor supports, affixed to building substrate, for wall-mounting fixtures
1 Use carrier supports with waste fitting and seal for back-outlet fixtures.
2 Install back-outlet, wall-mounting fixtures onto waste fitting seals and attach to supports
3 Install floor-mounting fixtures on closet flanges or other attachments to piping or building substrate
4 Install wall-mounting fixtures with tubular waste piping attached to supports

C. Install fixtures level and plumb according to roughing-in drawings

D. Install water-supply piping with stop on each supply to each fixture to be connected to water distribution piping Attach supplies to supports or substrate within pipe spaces behind fixtures Install stops in locations where they can be easily reached for operation

E Install trap and tubular waste piping on drain outlet of each fixture to be directly connected to sanitary drainage system

1 Install tubular waste piping on drain outlet of each fixture to be indirectly connected to drainage system

F Install tank-type water closets with lever handle mounted on side of tank
1 Install toilet seats on water closets

G Install flow-control fittings with specified maximum flow rates Include adapters if required
1 Faucet-spouts if faucets are not available with required rates and patterns
2 Water-supply lines at stop valves
3 Shower in shower arms.

H Install traps on fixture outlets
1 Exception Omit trap on fixtures with integral traps.
2 Exception Omit trap on indirect wastes, unless otherwise indicated.

I Install escutcheons at piping wall and ceiling penetrations in exposed, finished locations and within cabinets and millwork Use deep-pattern escutcheons if required to conceal protruding fittings

J Set bathtubs in leveling bed of cement grout

K Seal joints between fixtures and walls, floors, and pedestal sink tops using sanitary-type, one-part, mildew-resistant silicone sealant Match sealant color to fixture color Sealants are specified in Section 07 90 00 "Joint Protection "

3 03 CONNECTIONS

A Drawings indicate general arrangement of piping, fittings, and specialties

B Connect fixtures with water supplies, stops, and risers, and with traps, soil, waste, and vent piping. Use size fittings required to match fixtures

3 04 FIELD QUALITY CONTROL

A Verify installed plumbing fixtures meet category and type specified for installed location Check that plumbing fixtures are complete with trim, faucets, fittings, and other specified components

B Inspect installed plumbing fixtures for damage. Replace damaged fixtures and components

C Test installed fixtures after water systems are pressurized for proper operation. Replace malfunctioning fixtures and components, then retest Repeat until units operate properly

3 05 CLEANING AND PROTECTION

A Clean plumbing fixtures of plaster, stickers, tags, rust stains, and other foreign matter or discoloration, leaving every part in acceptable condition and ready for use
1 Provide protective covering for installed fixtures and fittings

B Do not allow use of plumbing fixtures for temporary facilities unless approved in writing by Owner

End of Section 22 40 00

SECTION 26 00 00 – ELECTRICAL

PART 1 - GENERAL

1 01 SUMMARY

A Section Includes
1 Interior lighting fixtures, lamps, ballasts, and supports
2. Raceways and boxes, wiring, conduit

1 02 SUBMITTALS

A Product Data· For each type of lighting fixture, arranged in order of fixture designation Include data on features, accessories, finishes, and the following
1. Physical description of lighting fixture including dimensions.
2 Energy-efficiency data
3 Life, output, and energy-efficiency data for lamps

1 03 QUALITY ASSURANCE

A Electrical Components, Devices, and Accessories Listed and labeled as defined in NFPA 70, Article 100, by a testing agency acceptable to authorities having jurisdiction, and marked for intended use

1 04 COORDINATION

A Coordinate layout and installation of electrical and lighting fixtures with other systems such at plumbing and structural.

PART 2 - PRODUCTS

2 01 MANUFACTURERS

A Basis-of-Design Product Design for each lighting fixture is based on product named on Electrical Drawings
1. Subject to compliance with requirements, provide either named product or a comparable product by one of other manufacturers specified

2 02 ELECTRICAL COMPONENTS

A Wiring devices shall be of specifications grade· replace junction boxes and switches to match existing

B. Surface mounted wire mold Underwriters Laboratories Inc (UL) rated for location and use

C Wires New and soft drawn copper with not less than 97 percent conductivity

1 Wire. Size, grade of insulation, voltage, and manufacturer's name permanently marked on outer covering at not more than 2-foot intervals
2 Wires Conform to latest adopted Standards of ASTM, ICEA and NEC
3 Mounting and type of enclosures as indicated for indoor enclosures NEMA 12
4 Minimum interrupting capacity of devices is 10,000 Amps
5 Protective devices Bolt on type and replaceable without disturbing adjacent units
6 Wire connectors· Suitable for wire sizes replaced

2 03 LIGHTING FIXTURES AND COMPONENTS, GENERAL REQUIREMENTS

A Interior Lighting Fixtures Vanity Light Bar
1 Three light bar light fixture, surface mount above medicine cabinet at Bathrooms
a Hampton Bay, Model No FLT1393A-4
b Provide with three lamps meeting manufacturer's recommended wattage and size
c. Provide unit with three frosted ribbed glass shades fitting fixture
d Brush nickel finish

B Metal Parts Free of burrs and sharp corners and edges

PART 3 - EXECUTION

3 01 INSTALLATION OF ELECTRICAL EQUIPMENT

A Codes and Requirements
1 Conform to applicable federal, state, and local code ordinances and regulations. Obtain necessary permits and inspections required by governing authorities
2 Perform Work in neat, workmanlike, finished and safe manner, according to latest published N E C A standards of installation, under competent supervision
3 Provide grounding as required by National Electrical Code

B Coordinate installation of electrical wiring and equipment with other trades
1 Verify NEC clearance requirements prior to installation
2 Where equipment cannot be built-in during construction, arrange for sleeves, box-outs, and other openings, as required to allow installation of equipment in existing construction or after construction is complete
3 Conduit runs are schematic only, and shall be modified as required to suit field conditions, subject to review and acceptance by Architect
4 As far as practical, circuits shall be continuous from origin to termination without splices in intermediate pull boxes Sufficient slack shall be left at termination to make proper connections In no case shall a splice be pulled into conduit
5 Outlet boxes for concealed wiring Mount with manufactured or field fabricated brackets
6. Verify equipment will fit support layouts indicated Equipment Dimensions and Clearances
a Do not use equipment that exceeds indicated dimensions
b. Do not use equipment or arrangements of equipment that reduce required clearances or exceed space allocation, or that reduce current-carrying capacity

C Install equipment as indicated and in accordance with manufacturer's instructions
1 Install equipment so it is readily accessible for operation and maintenance.
2 Equipment shall not be blocked or concealed
3 Do not install electrical equipment such that it interferes with normal maintenance requirements of other equipment

4 Install equipment plumb, square and true with building construction, securely fastened

D Provide necessary anchoring devices and supports

E. Verify rough-in locations and dimensions for connection to existing electrical
1 Proceeding without proper information may require removal and replacement of Work that does not meet conditions imposed by equipment supplied

3 02 CUTTING AND REPAIRING

A Where it becomes necessary to cut into existing work for purpose of making electrical installations, use core drills for making circular holes Other demolition methods for cutting or removing shall be reviewed by Architect prior to starting Work
1 Provide sleeves wherever openings are required through concrete or masonry members Place sleeves accurately and coordinate locations with Architect
2 Should any cutting and patching be required on account of failure to coordinate penetrations, such cutting and patching shall be performed without additional expense to Owner
a Do not endanger stability of any structural member by cutting, digging, chasing, or drilling and shall not, at any time, cut or alter Work without Architect's written consent
1) Provide additional reinforcing if required
2) Cutting shall be done neatly using proper tools and methods

B Perform subsequent patching to restore walls, ceilings, or floors to their original condition Repair damage caused by cutting and repair work, construction, or demolition work, and restore damaged areas to original condition

3 03 LIGHTING INSTALLATION

A Install according to manufacturers' written instructions, using recommended installation method and materials Install units level, plumb, and square with ceilings and walls. Firmly anchor in locations and at heights indicated
1. Lighting fixtures· Install glass shades and lamps in each fixture
2 Connect wiring

3 04 CLEANING

A Remove temporary labels and protective coatings

B Clean and polish exposed surfaces according to manufacturer's written recommendations

End of Section 26 00 00

SECTION 31 31 16 - TERMITE CONTROL

PART 1 - GENERAL

1 01 SUMMARY

A Section includes soil treatment with termiticide for areas under existing slabs-on-grade that are penetrated or disturbed as result of Work of this Project, such as bath tub or shower drain knock-outs

1 02 PERFORMANCE REQUIREMENTS

A Service Life of Soil Treatment Soil treatment by use of a termiticide that is effective for not less than five years against infestation of subterranean termites

1 03 SUBMITTALS

A Product Data For termiticide Include the EPA-Registered Label for termiticide products

B Product Certificates For termite control products, signed by product manufacturer

C. Soil Treatment Application Report After application of termiticide is completed, submit report for Owner's record information, including the following
1 Date and time of application Moisture content of soil before application
2 Brand name and manufacturer of termiticide
3 Quantity of undiluted termiticide used Dilutions, methods, volumes, application rate used
4 Areas of application

1 04 QUALITY ASSURANCE

A Regulatory Requirements Formulate and apply termiticides according to EPA-Registered Label.

1 05 COORDINATION

A Coordinate soil treatment application with relocation of plumbing drains and other under slab disturbed soil locations

PART 2 - PRODUCTS

2 01 MANUFACTURERS

A Manufacturers Subject to compliance with requirements, provide products by one of the following
1 Termiticides
a Aventis Environmental Science USA LP, Termidor
b Bayer Corporation, Premise 75
c Dow AgroSciences LLC, Dursban TC or Equity
d FMC Corporation, Agricultural Products Group, Talstar, Prevail, or FT Torpedo
e Syngenta, Demon TC

f Or other prior approved equal meeting requirements of this Section and Drawings

2 02 SOIL TREATMENT

A Termiticide Provide an EPA-registered termiticide complying with requirements of authorities having jurisdiction, in an aqueous solution formulated to prevent termite infestation. Provide quantity required for application at the label volume and rate for the maximum termiticide concentration allowed for each specific use, according to product's EPA-Registered Label

PART 3 - EXECUTION

3 01 EXAMINATION

A Examine substrates, areas, and conditions, with Applicator present, for compliance with requirements for moisture content of soil and other conditions affecting performance of termite control Proceed with application only after unsatisfactory conditions have been corrected

3 02 PREPARATION

A Comply with the most stringent requirements of authorities having jurisdiction and with manufacturer's written instructions for preparation before beginning application of termite control treatment Remove all foreign matter, impermeable soil materials, extraneous sources of wood cellulose and other edible materials from soil within and around new plumbing drain locations

3 03 APPLICATION

A Comply with the most stringent requirements of authorities having jurisdiction and with manufacturer's EPA-Registered Label for products

B Mix soil treatment termiticide solution to a uniform consistency Provide quantity required for application at the label volume and rate for the maximum specified concentration of termiticide, according to manufacturer's EPA-Registered Label, to the following so that a continuous horizontal and termiticidal barrier or treated zone is established around and under exposed building construction Distribute treatment evenly
1 New Penetrations At areas where existing slabs are penetrated

C Avoid disturbance of treated soil after application Keep off treated areas until completely dry

D Protect termiticide solution, dispersed in treated soils and fills, from being diluted until ground-supported slabs are installed

E Post warning signs in areas of application

F Reapply soil treatment solution to areas disturbed by subsequent excavation, grading, landscaping, or other construction activities following application

End of Section 31 31 16

PROJECT SPECIFICATIONS AND CONTRACT DOCUMENTS

MAYOR
Jerry P. Weiers

COUNCIL MEMBERS
Norma S. Alvarez
Samuel U. Chavira
Ian Hugh
Yvonne J. Knaack
Manuel D. Martinez
Gary D. Sherwood

CITY MANAGER
Brenda S. Fischer

CITY ATTORNEY
Michael D. Bailey

CITY CLERK
Pamela Hanna

CITY ENGINEER
David D. Beard

GLENDALE

DAVIS BACON FEDERAL WAGE DECISIONS

RESIDENTIAL

General Decision Number: AZ140001 01/17/2014 AZ1

Superseded General Decision Number: AZ20130001

State: Arizona

Construction Type: Residential

County: Maricopa County in Arizona.

RESIDENTIAL CONSTRUCTION PROJECTS (consisting of single family homes and apartments up to and including 4 stories).

Modification Number	Publication Date
0	01/03/2014
1	01/17/2014

BRAZ0003-007 07/01/2010

	Rates	Fringes
BRICKLAYER	$ 18.00	4.13

ENGI0428-005 07/29/2013

	Rates	Fringes
OPERATOR: Grader/Blade	$ 25.34	9.05

* IRON0075-008 01/01/2014

	Rates	Fringes
IRONWORKER, STRUCTURAL	$ 26.52	21.02

PLAS0394-006 07/01/2011

	Rates	Fringes
CEMENT MASON/CONCRETE FINISHER	$ 22.84	8.57

SUAZ2011-001 07/28/2011

	Rates	Fringes
ALARM INSTALLER, Includes Wiring and Installation	$ 13.91	0.00
CARPENTER, Excludes Drywall Hanging, and Form Work	$ 18.16	0.00
DRYWALL HANGER	$ 15.00	0.58
ELECTRICIAN, Excludes Low Voltage Wiring and Installation of Alarms	$ 15.45	0.01
FORM WORKER	$ 14.37	0.00

GLAZIER	$ 13.45	0.00
HVAC MECHANIC (Installation of HVAC Duct)	$ 15.36	0.00
LABORER: Common or General	$ 10.18	0.00
LABORER: Grade Checker	$ 16.83	0.45
LABORER: Mason Tender - Brick	$ 12.77	0.00
LABORER: Mason Tender - Cement/Concrete/Stone	$ 11.00	0.00
LABORER: Pipelayer	$ 13.00	0.00
OPERATOR: Backhoe	$ 18.29	0.00
OPERATOR: Excavator	$ 24.67	0.00
OPERATOR: Forklift	$ 16.17	0.00
OPERATOR: Loader (Front End)	$ 15.00	0.00
OPERATOR: Paver (Asphalt, Aggregate, and Concrete)	$ 20.75	0.00
OPERATOR: Roller	$ 16.24	1.42
OPERATOR: Scraper	$ 19.20	1.52
OPERATOR: Tractor	$ 22.63	0.00
PAINTER: Brush, Roller and Spray, Excludes Drywall Finishing/Taping	$ 12.89	0.00
PLUMBER	$ 20.14	4.08
ROOFER	$ 13.67	0.00
SPRINKLER FITTER (Fire Sprinklers)	$ 17.73	0.00
TRUCK DRIVER: Dump Truck	$ 17.02	0.00
TRUCK DRIVER: Water Truck	$ 14.50	0.00

WELDERS - Receive rate prescribed for craft performing operation to which welding is incidental.

==========

Unlisted classifications needed for work not included within the scope of the classifications listed may be added after award only as provided in the labor standards contract clauses (29CFR 5.5 (a) (1) (ii)).

The body of each wage determination lists the classification and wage rates that have been found to be prevailing for the cited type(s) of construction in the area covered by the wage determination. The classifications are listed in alphabetical order of "identifiers" that indicate whether the particular rate is union or non-union.

Union Identifiers

An identifier enclosed in dotted lines beginning with characters other than "SU" denotes that the union classification and rate have found to be prevailing for that classification. Example: PLUM0198-005 07/01/2011. The first four letters , PLUM, indicate the international union and the four-digit number, 0198, that follows indicates the local union number or district council number where applicable , i.e., Plumbers Local 0198. The next number, 005 in the example, is an internal number used in processing the wage determination. The date, 07/01/2011, following these characters is the effective date of the most current negotiated rate/collective bargaining agreement which would be July 1, 2011 in the above example.

Union prevailing wage rates will be updated to reflect any changes in the collective bargaining agreements governing the rates.

0000/9999: weighted union wage rates will be published annually each January.

Non-Union Identifiers

Classifications listed under an "SU" identifier were derived from survey data by computing average rates and are not union rates; however, the data used in computing these rates may include both union and non-union data. Example: SULA2004-007 5/13/2010. SU indicates the rates are not union majority rates, LA indicates the State of Louisiana; 2004 is the year of the survey; and 007 is an internal number used in producing the wage determination. A 1993 or later date, 5/13/2010, indicates the classifications and rates under that identifier were issued as a General Wage Determination on that date.

Survey wage rates will remain in effect and will not change until a new survey is conducted.

WAGE DETERMINATION APPEALS PROCESS

1.) Has there been an initial decision in the matter? This can be:

* an existing published wage determination
* a survey underlying a wage determination
* a Wage and Hour Division letter setting forth a position on a wage determination matter
* a conformance (additional classification and rate) ruling

On survey related matters, initial contact, including requests for summaries of surveys, should be with the Wage and Hour Regional Office for the area in which the survey was conducted because those Regional Offices have responsibility for the Davis-Bacon survey program. If the response from this initial contact is not satisfactory, then the process described in 2.) and 3.) should be followed.

With regard to any other matter not yet ripe for the formal process described here, initial contact should be with the Branch of Construction Wage Determinations. Write to:

Branch of Construction Wage Determinations
Wage and Hour Division
U.S. Department of Labor
200 Constitution Avenue, N.W.
Washington, DC 20210

2.) If the answer to the question in 1.) is yes, then an interested party (those affected by the action) can request review and reconsideration from the Wage and Hour Administrator (See 29 CFR Part 1.8 and 29 CFR Part 7). Write to:

Wage and Hour Administrator
U.S. Department of Labor
200 Constitution Avenue, N.W.
Washington, DC 20210

The request should be accompanied by a full statement of the interested party's position and by any information (wage payment data, project description, area practice material, etc.) that the requestor considers relevant to the issue.

3.) If the decision of the Administrator is not favorable, an interested party may appeal directly to the Administrative Review Board (formerly the Wage Appeals Board). Write to:

Administrative Review Board
U.S. Department of Labor
200 Constitution Avenue, N.W.
Washington, DC 20210

4.) All decisions by the Administrative Review Board are final.

==========

END OF GENERAL DECISION

U.S. Department of Housing and Urban Development
Office of Labor Relations

A Contractor's Guide to Davis-Bacon Wage Requirements & Certified Payroll Reports

(As edited by the Arizona Department of Housing, CDBG Program, 2/98)

(Prevailing Wage Requirements for Federal and Federally-assisted Construction Projects)

March 1997

INTRODUCTION

The purpose of this Guide is to explain in simple and non-bureaucratic terms exactly what is required of contractors and subcontractors working on construction projects covered by Federal Davis-Bacon prevailing wage and reporting requirements. HUD's Office of Labor Relations is providing this Guide as a service to assist you in better understanding your labor standards and compliance responsibilities. This Guide has been developed in consultation with the Department of Labor's Wage and Hour Division. **This guide has also been edited by the State of Arizona Department of Housing, CDBG Program, for applicability to the state's program requirements.**

There are three chapters in this Guide. The first chapter provides a brief description of the laws and regulations associated with Federal labor standards administration and enforcement and discusses both what's in your contract that requires Davis-Bacon compliance as well as your responsibilities. The second chapter deals with labor standards and payroll reporting requirements. The third chapter discusses what can happen in the event there is a dispute about the wage rates that should be (or have been) paid and any back wages that may be due.

This Guide is focused primarily on the requirements and responsibilities associated with HUD-assisted construction work subject to Davis-Bacon wage rates, but the guidance is also generally applicable to Davis-Bacon covered projects administered by other Federal agencies.

Not all HUD construction projects are covered by Davis-Bacon wage rates. For the purpose of this Guide, we shall assume that a determination has already been made that Davis-Bacon wage rates are applicable.

Look for these boxes throughout this Guide for time saving tips, cross references, and other helpful information.

Visit the Office of Labor Relations on the World Wide Web HUD Home Page at ***http://www.hud.gov/***

and

Arizona Department of Housing
CDBG Program
1700 West Washington Street
Phoenix, AZ 85007
Phone: 602/ 771-1000
Fax. 602/ 771-1002
Email joyj@housingaz.com

TABLE OF CONTENTS

CHAPTER 1. LAWS, REGULATIONS, CONTRACTS AND RESPONSIBILITIES

1-1 Davis-Bacon and Other Labor Laws
- a The Davis-Bacon Act (DBA)
- b The Contract Work Hours and Safety Standards Act (CWHSSA)
- c The Copeland Act (Anti-Kickback Act)
- d The Fair Labor Standards Act (FLSA)

1-2 Davis-Bacon Regulations
1-3 Construction Contract Provisions
1-4 Responsibility of the Principal Contractor
1-5 Responsibility of the Contract Administrator

CHAPTER 2. HOW TO COMPLY WITH LABOR STANDARDS AND PAYROLL REPORTING REQUIREMENTS

SECTION I THE BASICS

2-1 The Wage Decision
- a. The work classifications and wage rates.
- b. Posting the wage decision

2-2 Additional "Trade" Classifications and Wage Rates
- a. Additional classification rules.
- b. Making the request.
- c HUD review.
- d. DOL decision

2-3 Certified Payroll Reports
- a. Payroll formats.
- b Payroll certifications
- c "No work" payrolls
- d Payroll review and submission.
- e. Payroll retention
- f Payroll inspection.

2-4 Davis-Bacon Definitions
- a Laborer or mechanic.
- b Employee.
- c. Apprentices and trainees.
- d. Prevailing wages or wage rates.
- e. Fringe benefits
- f. Site of work
- g. Overtime.
- h. Deductions.
- I. Proper designation of trade.

SECTION II REPORTING REQUIREMENTS

2-5 Completing a Payroll Report
- a Project and contractor/subcontractor information.
- b. Employee information
- c Work classification.
- d Hours worked.
- e. Rate of pay.
- f Gross wages earned.
- g. Deductions.
- h. Net pay
- I Statement of compliance.
- j. Signature

SECTION III PAYROLL REVIEWS AND CORRECTIONS

2-6 Compliance Reviews
- a. On-site interviews.
- b Project payroll reviews.

2-7 Typical Payroll Errors and Required Corrections.
- a Inadequate payroll information.
- b. Missing addresses and Social Security Numbers
- c Incomplete payrolls
- d Classifications
- e Wage rates
- f. Apprentices and trainees.
- g Overtime
- h Computations.
- i. Deductions
- j. Fringe benefits.
- k. Signature
- l. On-site interview comparisons

2-8 Restitution for Underpayment of Wages
- a Notification to the prime contractor.
- b. Computing wage restitution.
- c. Correction payrolls
- d. Employee signature.
- e Review of correction CPR.
- f Unfound workers.

CHAPTER 3. LABOR STANDARDS DISPUTES, ADMINISTRATIVE REVIEWS, WITHHOLDING AND DEPOSITS AND ESCROW ACCOUNTS

3-1 Introduction

3-2 Administrative Review on Labor Standards Disputes
    a. Additional classifications and wage rates.
    b. Findings of underpayment.

3-3 Withholding.
3-4 Deposits and Escrow Accounts
3-5 Debarment.

EXHIBITS

LS-4, Payroll Form
LS-5, Statement of Compliance

CHAPTER 1 LAWS, REGULATIONS, CONTRACTS AND RESPONSIBILITIES

The following paragraphs describe what the labor standards laws and regulations actually say and what it means to you on HUD projects

1-1 DAVIS-BACON AND OTHER LABOR LAWS

a **The Davis-Bacon Act (DBA).** The Davis-Bacon Act requires the payment of prevailing wage rates (which are determined by the U S Department of Labor) to all laborers and mechanics on Federal construction projects in excess of $2,000 Construction includes alteration and/or repair, including painting and decorating, of public buildings or public works

b **The Contract Work Hours and Safety Standards Act (CWHSSA).** CWHSSA requires time and one-half pay for overtime (O/T) hours (over 40 in any workweek) worked on the covered project The CWHSSA applies to both direct Federal contracts and to indirect Federally-assisted contracts ***except*** where the assistance is solely in the nature of a loan guarantee or insurance. CWHSSA violations carry a liquidated damages penalty ($10/day per violation) Intentional violations of CWHSSA standards are considered a Federal criminal misdemeanor.

> ✆ The CWHSSA does not apply to *contracts* of $100,000 or less. Even though CWHSSA overtime pay is not required Fair Labor Standards Act (FLSA) overtime pay is probably still applicable *(See also* Labor Relations Letter *SL-95-01, CWHSSA Coverage threshold for overtime and health and safety provisions)*

c. **The Copeland Act (Anti-Kickback Act).** The Copeland Act makes it a crime for anyone to require any laborer or mechanic (employed on a Federal or Federally-assisted project) to ***kickback*** any part of their wages. The Copeland Act also requires every employer (contractors and subcontractors) to submit weekly certified payroll reports (CPRs).

d. **The Fair Labor Standards Act (FLSA).** The FLSA contains Federal minimum wage rates and overtime (O/T) requirements These requirements generally apply to any labor performed and may be ***pre-empted*** by other Federal standards such as the DBRA prevailing wage requirements and CWHSSA O/T provisions. Only the DOL has the authority to administer and enforce FLSA. HUD will refer to the DOL any possible FLSA violations that are found on HUD projects.

1-2 **DAVIS-BACON REGULATIONS.** The Department of Labor has published rules and instructions concerning Davis-Bacon and other labor laws in the Code of Federal Regulations (CFR) These regulations can be found in ***Title 29 CFR Parts 1, 3, 5, 6 and 7*** *Part 1* explains how the DOL establishes and publishes DBA wage determinations and provides instructions on how to use the determinations. *Part 3* describes Copeland Act requirements for payroll deductions and the submission of weekly certified payroll reports. *Part 5* covers the labor standards provisions that are in your contract relating to Davis-Bacon Act wage rates and the responsibilities of contractors and contracting agencies to administer and enforce the provisions *Part 6* provides for administrative proceedings enforcing Federal labor standards on construction and service contracts Last, *Part 7* sets parameters for practice before the Wage Appeals Board (*renamed Administrative Review Board*). These regulations are used as the basis for administering and enforcing the laws.

> ✆ DOL Regulations are available on-line on the World Wide Web:
> **http://www.dol.gov/dol/esa/public/regs/cfr/whdcfr.htm**.

1-3 **CONSTRUCTION CONTRACT PROVISIONS.** Each contract subject to Federal (Davis-Bacon) labor standards requirements must contain contract provisions containing labor standards clauses and a Davis-Bacon wage decision These documents are normally bound into the contract specifications.

a. **The labor standards clauses.** The labor standards clauses describe the responsibilities of the contractor concerning Davis-Bacon wages and obligate the contractor to comply with the labor requirements. The labor standards clauses also provide for remedies in the event of violations, including withholding from payments due to the contractor to ensure the payment of wages or liquidated damages which may be found due. These contract clauses enable the contract administrator to enforce the Federal labor standards applicable to the project. HUD has standard forms that contain contract clauses For example, the HUD-4010, Federal Labor Standards Provisions, which is used for CDBG and HOME projects.

b. **Davis-Bacon Wage Decisions.** The Davis-Bacon wage decision is a listing of various construction work classifications such as Carpenter, Plumber, and Electrician, for example, and the minimum wage rates (and fringe benefits, where prevailing) that people performing work in those classifications must be paid.

1-4 **RESPONSIBILITY OF THE PRINCIPAL CONTRACTOR.** The principal contractor (also referred to as the ***prime*** *or* ***general contractor***) is responsible for the full compliance of all employers (the contractor, subcontractors and any lower-tier subcontractors) with the labor standards provisions applicable to the project. Because of the contractual relationship between a prime contractor and his/her subcontractors, questions to, or from, or about subcontractors should always be channeled through the prime contractor.

> ✆ To make this Guide easier to understand, the term ***"prime contractor"*** will mean the principal contractor; ***"subcontractor"*** will mean all subcontractors including lower-tier subcontractors, and the term ***"employer"*** will mean all contractors as a group, including the prime contractor and any subcontractors and lower-tier subcontractors.

1-5 **RESPONSIBILITY OF THE CONTRACT ADMINISTRATOR.** The ***contract administrator***(s) is responsible for the proper administration and enforcement of the Federal labor standards provisions on contracts covered by Davis-Bacon requirements and will likely be local grantee staff or under contract to the local governement. We use this term to represent the person (or persons) who will provide labor standards preconstruction advice and support to you and other project principals (for example, the owner, sponsor, architect), including providing the proper Davis-Bacon wage decision (see paragraph 2-1, ***The Wage Decision***) and ensuring that the wage decision and contract clauses are incorporated into the contract for construction

The DOL also has a role in monitoring Davis-Bacon administration and enforcement. A DOL investigator or other DOL representative may visit Davis-Bacon construction sites to interview construction workers or review payroll information

> ✆ All communications to or from the prime contractor concerning the labor standards applicable to a particular contract, or concerning compliance with those standards should go through the contract administrator.

CHAPTER 2 HOW TO COMPLY WITH LABOR STANDARDS AND PAYROLL REPORTING REQUIREMENTS

WHERE TO START? Now that you know you're on a Davis-Bacon project and you know some of the legal and practical implications, what's next?

SECTION I THE BASICS

2-1 **THE WAGE DECISION.** Davis-Bacon labor standards stipulate the wage payment requirements for *Carpenters, Electricians, Plumbers, Roofers, Laborers, and other construction work classifications* that may be needed for the project The ***Davis-Bacon wage decision*** that applies to the project contains a schedule of work classifications and wage rates that must be followed If you don't have it already (and by now you should), you'll want to get a copy of the applicable ***Davis-Bacon wage decision***

> ⓘ Remember, the wage decision is contained in the contract specifications along with the labor standards clauses. *See ¶1-3, Construction Contract Provisions*

a. **The work classifications and wage rates.** A Davis-Bacon wage decision is simply a listing of different work classifications and the minimum wage rates that must be paid to anyone performing work in those classifications. You'll want to make sure that the work classification(s) you need are contained in the wage decision and make certain you know exactly what wage rate(s) you will need to pay. Some wage decisions cover several counties and/or types of construction work (for example, residential and commercial work) and can be lengthy and difficult to read. Contact the *contract administrator* (HUD Labor Relations field staff or local agency staff) if you have any trouble reading the wage decision or finding the work classification(s) you need

b. **Posting the wage decision.** If you are the prime contractor, you will be responsible for posting a copy of the wage decision (or the Project Wage Rate Sheet) and a copy of a DOL poster called *Notice to Employees* at the job site in a place that is easily accessible to all of the construction workers employed at the project and where the wage decision and poster won't be destroyed by wind or rain, etc The *Notice to Employees* poster is also available with Spanish text.

2-2 **ADDITIONAL "TRADE" CLASSIFICATIONS AND WAGE RATES. What if the work classification you need isn't on the wage decision?** If the work classification(s) that you need doesn't appear on the wage decision, you will need to request an ***additional classification and wage rate.*** This process is usually very simple and you'll want to start the request right away. Basically, you identify the classification you need and recommend a wage rate for DOL to approve for the project. There are a few rules about additional classifications; you'll find these rules in the DOL regulations, Part 5, and in the labor clauses in your contract The rules are summarized for you here:

a. **Additional classification rules.** Additional classifications and wage rates can be approved if:

1) The requested classification is used by construction contractors in the area of the project. (The area is usually defined as the *county* where the project is located).

2) The work that will be performed by the requested classification is not already performed by another classification that is already on the wage decision (In other words, if there already is an Electrician classification and wage rate on the wage decision you can't request another Electrician classification and rate.)

3) The proposed wage rate for the requested classification "fits" with the other wage rates already on the wage decision. (For example, the wage rate proposed for a trade classification such as Electrician must be at least as much as the lowest wage rate for other trade classifications already contained in the wage decision.) And,

4) The workers that will be employed in the added classification (if it is known who the workers are/will be), or the workers' representatives, must agree with the proposed wage rate

b. **Making the request.** A request for additional classification and wage rate must be made in writing through the contract administrator. (If the contract administrator is a local agency, the agency will send the request to the HUD Labor Relations staff) If you are a subcontractor, your request should also go through the prime contractor All you need to do is identify the work classification that is missing and recommend a wage rate (usually the rate that employer is already paying to the employees performing the work) for that classification. You may also need to describe the work that the new classification will perform.

c. **DOL review and decision.** The contract administrator will then send the request to the Department of Housing, CDBG Program. The request is then forwarded the Department of Labor for approval. The DOL will respond to Housing in writing about the additional classification and wage rate request. Housing will notify the contract administrator of the DOL decision in writing. If the DOL approves the request, the prime contractor must post the approval notice on the job site with the wage decision

If the DOL *does not* approve the request, you will be notified about what classification and wage rate should be used for the work in question

2-3 **CERTIFIED PAYROLL REPORTS.** You'll need to submit a weekly certified payroll report beginning with the first week that your company works on the project and for every week afterward until your firm has completed its work It's always a good idea to number the payroll reports beginning with #1 and to clearly mark your last payroll for the project "Final."

a. **Payroll formats.** The easiest form to use is DOL's LS-4, ***Payroll.*** A sample copy of the LS-4 is included in the back of this Guide Also, the contract administrator can provide a few copies of the LS-4 that you can reproduce.

> ✆ You are *not required* to use Payroll Form LS-4 You are welcome to use any other type of payroll, such as computerized formats, as long as it contains all of the information that is required on the LS-4.

b. **Payroll certifications.** The weekly payrolls are called *certified* because each payroll is signed and contains language certifying that the information is true and correct. The payroll ***certification*** language is on the LS-5 ***Statement of Compliance.*** If you are using another type of payroll format you may attach the certification A copy of the LS-5 is included in the back of this Guide Copies of the LS-5 are also available from the contract administrator.

c. **"No work" payrolls.** "No work" payrolls may be submitted whenever there is a temporary break in your work on the project. *(See Tip Box, below, for "no work" payroll exemption!)* For example, if your firm is not needed on the project right now but you will be returning to the job in a couple of weeks However, if you know that your firm will not be working on the project for an extended period of time, you may wish to send a short note to the contract administrator to let them know about the break in work and to give an approximate date when your firm will return to the project. If you send a note, you *do not* need to send "no work" payrolls.

> ✆ If you number your payroll reports consecutively, you *do not* need to submit "no work" payrolls!

d **Payroll review and submission.** The prime contractor should **review** each subcontractor's payroll reports for compliance ***prior*** to submitting the reports to the contract administrator Remember, the prime contractor is responsible for the full compliance of all subcontractors on the contract and will be held accountable for any wage restitution that may be found due to any laborer or mechanic that is underpaid *and* for any liquidated damages that may be assessed for overtime violations. All of the payroll reports for any project must be submitted to the contract administrator *through* the prime contractor.

> ⓘ An alert prime contractor that reviews subcontractor payroll submissions can detect any misunderstandings early, prevent costly underpayments and protect itself from financial loss should underpayments occur

e **Payroll retention.** Every contractor (including every subcontractor) must keep a complete set of their own payrolls and other basic records such as time cards, for a Davis-Bacon project for at least 3 years after the project is completed. The prime contractor must keep a complete set of all of the payrolls for every contractor (including subcontractors) for at least 3 years after completion of the project.

f **Payroll inspection.** In addition to submitting payrolls to the contract administrator, every contractor (including subcontractors) must make their *own* copy of the payrolls available for review or copying to any authorized representative from HUD or from DOL.

2-4 **DAVIS-BACON DEFINITIONS.** Before we discuss how to complete the weekly payroll forms, we need to review a couple of definitions. These definitions can help you understand what will be required of you:

a. **Laborer or mechanic.** "Laborers" and "mechanics" mean anyone who is performing construction work on the project, including trade journeymen (carpenters, plumbers, sheet metal workers, etc), apprentices, trainees and, for CWHSSA purposes, watchmen and guards. "Laborers" and "mechanics" are the two groups of workers that must be paid not less than Davis-Bacon wage rates.

1) **Working foremen.** Foremen or supervisors that regularly spend **more** than 20% of their time performing construction work are covered "laborers" and "mechanics" for labor standards purposes.

2) **Exclusions.** People whose duties are primarily administrative, managerial or clerical are not laborers or mechanics. For example, office staff, timekeepers, messengers, etc. (Contact the contract administrator if you have any questions about whether a particular employee is excluded.)

b. **Employee.** Every person who performs the work of a laborer or mechanic is "*employed*" regardless of any contractual relationship which may be alleged to exist between a contractor or subcontractor and such person. This means that even if there is a contract between a contractor and a worker, the contractor must make sure that the worker is paid at least as much as the wage rate on the wage decision for the classification of work they perform

> ⓘ Labor Relations Letters and other helpful Labor relations publications are available at HUDs website (see *Introduction* at the beginning of this Guide.

c. **Apprentices and trainees.** The only workers who can be paid less than the wage rate on the wage decision for their work classification are "apprentices" and "trainees" registered in approved apprenticeship or training programs, including *Step-Up* apprenticeship programs designed for Davis-Bacon construction work. Approved programs are those which have been registered with the DOL, Bureau of Apprenticeship and Training (BAT) or with a BAT-recognized State Apprenticeship

Agency (SAC) Apprentices and trainees are paid wage rates in accordance with the wage schedule in the approved program.

> ⓘ Most often, the apprentice/trainee wage rate is expressed as a series of percentages tied to the amount of time spent in the program For example, 0-6 months· 65%; 6 months - 1 year· 70%; etc The percentage is applied to the journeyman's wage rate On Davis-Bacon projects, the percentage must be applied to the journeyman's wage rate *on the applicable wage decision* for that craft.

1) **Probationary apprentice.** A "probationary apprentice" can be paid as an apprentice (less than the rate on the wage decision) if the BAT or SAC has certified that the person is eligible for probationary employment as an apprentice.

2) **Pre-apprentice.** A "pre-apprentice", that is, someone who is not registered in a program and that hasn't been BAT- or SAC-certified for probationary apprenticeship is ***not*** considered to be an "apprentice" and must be paid the full journeyman's rate on the wage decision for the classification of work they perform.

3) **Ratio of apprentices and trainees to journeymen.** The maximum number of apprentices or trainees that you can use on the job site cannot be more than the ratio of apprentices or trainees to journeymen allowed in the approved program.

d. **Prevailing wages or wage rates.** Prevailing wage rates are the wage rates listed on the wage decision for the project. The wage decision will list a minimum basic hourly rate of pay for each work classification Some wage decisions include fringe benefits, which are usually listed as an hourly fringe rate. If the wage decision includes a fringe benefit rate for a classification, you will need to add the fringe benefit rate to the basic hourly rate *unless* you provide bona fide fringe benefits for your employees.

> ✐ ***Note*** that the *total* hourly wage rate paid to any laborer or mechanic (basic wage *or* basic wage plus fringe benefits) may be no less than the total wage rate (basic wage *or* basic wage plus fringe benefits) on the wage decision for their craft. If the value of the fringe benefit(s) you provide is less than the fringe benefit rate on the wage decision, you will need to add the balance of the wage decision fringe benefit rate to the basic rate paid to the employee. For example, if the wage decision requires $10/hour basic rate plus $5/hour fringe benefits, you must pay no less than that total ($15/hour) in the basic rate *or* basic rate plus whatever fringe benefit you may provide.

e. **Fringe benefits** include health insurance, retirement, life insurance, vacation and some contributions to training funds. Fringe benefits ***do not*** include employer payments or contributions required by other Federal, State or local laws, such as the employer's contribution to Social Security or some disability insurance payments.

f. **Site of work.** The "site of work" is where the Davis-Bacon wage rates apply. Usually, this means the boundaries of the project "Site of work" can also include other adjacent or nearby property used by a contractor or subcontractor in the construction of the project, like a fabrication site.

g. **Overtime.** Overtime hours are defined as all hours worked on the site of the work in excess of 40 hours in any work week Overtime hours must be paid at no less than one and one-half times the regular rate of basic pay plus the straight-time rate of any required fringe benefits.

h **Deductions.** You may make payroll deductions as permitted by DOL Regulations 29 CFR Part 3. These regulations prohibit the employer from requiring employees to "kick-back" any of their earnings. Allowable deductions include employee obligations for income taxes, Social Security

payments, insurance premiums, retirement, savings accounts, and any other legally-permissible deduction authorized by the employee. Deductions may also be made for payments on judgements and other financial obligations legally imposed against the employee

ı **Proper designation of trade.** You must select a work classification on the wage decision for each worker based on the actual type of work he/she performed and you must pay each worker no less than the wage rate on the wage decision for that classification regardless of their level of skill. In other words, if someone is performing carpentry work on the project, they must be paid no less than the wage rate on the wage decision for Carpenters *even* if they aren't considered by you to be fully trained as a Carpenter. ***Remember***, the only people who can be paid less than the rate for their craft is apprentices and trainees registered in approved programs.

1) **Split-classification.** If you have employees that perform work in more than one classification, you can pay the wage rates specified for each classification ***only*** if you maintain accurate time records showing the amount of time spent in each classification of work If you do not maintain accurate time records, you must pay these employees the *highest* wage rate of all of the classifications of work performed.

SECTION II REPORTING REQUIREMENTS

2-5 **COMPLETING A PAYROLL REPORT. What information has to be reported on the payroll form?** The weekly payroll form doesn't ask for any information that you don't already need to keep for wage payment and tax purposes. For example, you need to know each employee's ***name, address*** and ***social security number***; his or her ***work classification*** (who is working for you and what do they do?), the ***hours worked*** during the week, his or her ***rate of pay***, the ***gross amount earned*** (how much did they earn?), the amounts of any ***deductions*** for taxes, etc., and the ***net amount paid*** (how much should the paycheck be made out for?). No more information than you need to know in order to manage your work crew and make certain they are paid properly. And, certainly, no more information than you need to keep for IRS, Social Security and other tax and employment purposes.

> **FOR MOST CONTRACTORS, THE WEEKLY CERTIFIED PAYROLL IS ALL THE PAPERWORK THAT IS REQUIRED FOR A DAVIS-BACON PROJECT!**

a. **Project and contractor/subcontractor information.** Each payroll should show the contractor or subcontractor's name and address, the project name and number, and the week ending date. Indicate the *dates* in the spaces provided Numbering payrolls is optional but strongly recommended

b **Employee information.** The first payroll on which each employee appears must contain the employee's name, address and Social Security Number Afterward, the address and Social Security Number only need to be reported if there is a change in this information.

c **Work Classification.** Each employee must be classified in accordance with the wage decision based on the type of work they actually perform.

1) **Apprentices or Trainees.** The first payroll on which any apprentice or trainee appears must be accompanied by a copy of that apprentice's or trainee's registration in an approved program. A copy of the portions of the approved program pertaining to the wage rates and ratios shall also accompany the first LS-4 on which the first apprentice or trainee appears.

2) **Split classifications.** For employees in split classifications, list the employees once for each classification, distributing the hours of work accordingly, and reflecting the rate of pay and gross earnings for each classification Deductions and net pay may be based upon the total gross amount earned for all classifications.

d. **Hours Worked.** The payroll should show ONLY the regular and overtime hours worked on this project Show both the daily and total weekly hours for each employee If an employee performs work at job sites other than the project for which the payroll is prepared, those "other job" hours *should not* be reported on the payroll. In these cases, you should list the employee's name, classification, hours for this project only, the rate of pay and gross earnings for this project, and the gross earned for *all projects*. Deductions and net pay may be based upon the employee's total earnings (for all projects) for the week.

e **Rate of Pay.** Show the basic hourly rate of pay for each employee for this project If the wage decision includes a fringe benefit and you ***do not*** participate in approved fringe benefit programs, ***add*** the fringe benefit rate to the basic hourly rate of pay. Also list the overtime rate if overtime hours were worked.

> Remember, the overtime rate is computed at one and one-half times the *basic* rate of pay plus any fringe benefits. For example, if the wage decision requires $10/hour basic plus $5/hour fringe benefits, the overtime rate would be. ($10 x 1½) + $5 = $20/hour.

f **Gross Wages Earned.** Show the gross amount of wages earned for work performed on this project *Note:* For employees with work hours and earnings on other projects, you may show gross wages for this project over gross earnings all projects (for example, $425.40/$764.85) and base deductions and net pay on the "all projects" earnings

g **Deductions.** Show the amounts of any deductions from the gross earnings. "Other" deductions should be identified (for example, Savings Account or Loan Repayment). Any voluntary deduction (that is, not required by law or by an order of a proper authority) must be authorized in writing by the employee. A LS-15 signed by the employee is all that is needed and should accompany the first payroll on which the other deduction appears

> ⏲ Only one employee authorization is needed for recurring (e.g , weekly) other deductions Written employee authorization is not required for income tax and Social Security deductions.

h **Net Pay.** Show the net amount of wages paid

i **Statement of Compliance.** The Statement of Compliance is the certification It is located on the reverse side of a standard payroll form (LS-4) or on form LS-5. Be sure to complete the identifying information at the top, particularly if you are attaching the Statement of Compliance to an alternate payroll form such as a computer payroll. **Also, you must check either 4(a) or 4(b) if the wage decision contains a fringe benefit.** Checking 4(a) indicates that you are paying required fringe benefits to approved plans or programs, and 4(b) indicates that you are paying any required fringe benefit amounts directly to the employee by adding the fringe benefit rate to the basic hourly rate of pay. If you are paying a portion of the required fringe benefit to programs and the balance directly to the employee, explain those differences in box 4(c)

j **Signature.** Make sure the payroll is **signed** with an original signature The payroll must be signed by a principal of the firm (owner or officer such as the President, Treasurer or Payroll Administrator) or by an authorized agent (a person authorized by a principal in writing to sign the payroll reports) Signature authorization (for persons other than a principal) should be submitted with the first payroll signed by such an agent

> ⏲ Only one Statement of Compliance is required for each employer's weekly payroll no matter how many pages are needed to report the employee data

SECTION III PAYROLL REVIEWS AND CORRECTIONS

2-6 **COMPLIANCE REVIEWS.** The contract administrator or other inspector may visit the project site and interview some of the workers concerning their employment on the project In addition, the contract administrator will periodically review payrolls and related submissions, comparing the interview information to the payrolls, to ensure that the labor standards requirements have been met. You will be notified by the contract administrator if these reviews find any discrepancies or errors. You will be given instructions about what steps must be taken to correct any problems.

a **On-site Interviews.** Every employer (contractor, subcontractor, etc.) must make their employees available for interview at the job site with the contract administrator, other local government, Department of Housing, HUD or DOL representative. The interviews are confidential and the employee will be asked about the kind of work they perform and their rate of pay. Every effort will be made to ensure that these interviews cause as little disruption as possible to the on-going work. The interviewer will record the interview information, usually on a form LS-9, *Employee Interview.*

b. **Project payroll reviews.** The contract administrator will compare the information on the interview forms to the corresponding payrolls to ensure that the workers are properly listed on the payrolls for the days, work classification and rate of pay. The contract administrator will also review the payroll submissions to make certain that the payrolls are complete and signed; that employees are paid no less than the wage rate for the work classification shown; apprentice and trainee certifications are submitted (where needed); employee authorizations for other deductions are submitted (where needed), etc

2-7 **TYPICAL PAYROLL ERRORS AND REQUIRED CORRECTIONS.** The following paragraphs describe common payroll errors and the corrective steps you must take.

a. **Inadequate payroll information.** If the alternate payroll (such as a computer payroll) does not contain all of the information that would be on the optional form LS-4, the employer will be asked to resubmit the payrolls on an acceptable form.

b. **Missing addresses and Social Security Numbers.** If the first payroll on which an employee appears does not contain the employee's address and Social Security Number, the employer will be asked to supply the missing information. A short note providing the information is all that is needed.

c. **Incomplete payrolls.** If the information on the payroll is not complete, for example, if work classifications or rates of pay are missing, the employer will be asked to send a corrected payroll.

d **Classifications.** If the payrolls show work classifications that do not appear on the wage decision, the employer will be asked to reclassify the employees in accordance with the wage decision ***or*** the employer may request an ***additional classification and wage rate*** (*See paragraph 2-2)* If reclassification results in underpayment (the wage rate paid on the payroll is less than the rate required for the new classification, the employer will be asked to pay ***wage restitution*** to all affected reclassified employees. (*See paragraph 2-8 for instructions about wage restitution.*)

e. **Wage Rates.** If the wage rates on the payroll are less than the wage rates on the wage decision for the work classification reported, the employer will be asked to pay wage restitution to all affected employees.

f. **Apprentices and trainees.** If a copy of the employee(s) registration or approved program ratio and wage schedule is not submitted with the first payroll on which an apprentice or trainee appears, the employer will be asked to submit a copy of each apprentice's or trainee's registration and/or the approved program ratio and wage schedule If the ratio of apprentices or trainees to journeymen on the payroll is greater than the ratio in the approved program, the employer will be asked to pay wage restitution to any excess apprentices or trainees Also, any apprentice or trainee that is *not*

registered in an approved program must receive the journeyman's wage rate for the classification of work they performed

g. **Overtime.** If the employees did not receive at least time and one-half for any overtime hours worked on the project, the following will occur

1) If the project is subject to *CWHSSA overtime* requirements, the employer will be asked to pay wage restitution for all overtime hours worked on the project (overtime hours worked at other projects are not subject to CWHSSA). The employer may also be liable to the United States for liquidated damages computed at $10 per day per violation Or,

2) If the project is ***not*** subject to CWHSSA, the employer will be notified of the possible *FLSA overtime* violations Also, the Labor Relations staff may refer the violations to the DOL for further review.

h **Computations.** If the payroll computations (hours worked times rate of pay) or extensions (deductions, net pay) show frequent errors, the employer will be asked to take greater care Wage restitution may be required if underpayments resulted from the errors.

i **Deductions.** If there are any "Other" deductions that are not identified, or if employee authorization isn't provided, or if there is any unusual (very high, or large number) deduction activity, the employer will be asked to identify the deductions, provide employee authorization or explain unusual deductions, as necessary

j **Fringe benefits.** If the wage decision contains fringe benefits but the payroll does not indicate how fringe benefits were paid [neither 4(a) nor 4(b) is marked on the payroll form], the employer may be asked to submit corrected payrolls ***and*** will be required to pay wage restitution if underpayments occurred. *However,* if the basic hourly rates for the employees are at least as much as the total wage rate on the wage decision (basic hourly rate *plus* the fringe benefit rate), no correction is necessary

k. **Signature.** If the payroll *Statement of Compliance* is not signed or is missing, the employer will be asked to submit a signed Statement of Compliance for each payroll affected.

l **On-site interview comparisons.** If the comparison of on-site interviews to the payrolls indicates any discrepancies (for example, the employee does not appear on the payroll for the date of the interview), the employer will be asked to submit a corrected payroll report.

2-8 **RESTITUTION FOR UNDERPAYMENT OF WAGES.** Where underpayments of wages have occurred, the employer will be required to pay wage restitution to the affected employees. Wage restitution must be paid promptly in the full amounts due, less permissible and authorized deductions.

a. **Notification to the prime contractor.** The contract administrator will notify the prime contractor in writing of any underpayments that are found during payroll or other reviews. The notice will describe the underpayments and provide instructions for computing and documenting the restitution to be paid The prime contractor is allowed 30 days to correct the underpayments. Note that the prime contractor is responsible to the contract administrator for ensuring that restitution is paid. If the employer is a subcontractor, the subcontractor will usually make the computations and restitution payments and furnish the required documentation through the prime contractor

b **Computing wage restitution.** Wage restitution is simply the difference between the wage rate paid to each affected employee and the wage rate required on the wage decision for all hours worked where underpayments occurred The difference in the wage rates is called the *adjustment*

rate The adjustment rate times the number of hours involved equals the gross amount of restitution due

c. **Correction payrolls.** The employer will be required to report the restitution paid on a correction certified payroll The correction payroll will reflect the period of time for which restitution is due (for example, Payrolls #1 through #6, or a beginning date and ending date) The correction payroll will list each employee to whom restitution is due and their work classification, the total number of work hours involved (daily hours are usually not applicable for restitution); the adjustment wage rate (the difference between the required wage rate and the wage rate paid); the gross amount of restitution due; deductions and the net amount to be paid. A signed Statement of Compliance must be attached to the corrected payroll.

d. **Employee signature.** Each employee who has received restitution signs the correction payroll as evidence of their receipt of the payment.

e. **Review of correction CPR.** The contractor administrator will review the correction payroll to ensure that full restitution was paid. The prime contractor shall be notified in writing of any discrepancies and will be required to make additional payments, if needed, documented on a supplemental correction payroll within 30 days.

f **Unfound workers.** Sometimes, wage restitution cannot be paid to an affected employee because, for example, the employee has moved and can't be located.

In these cases, at the end of the project the prime contractor will be required to place in a deposit or escrow account an amount equal to the total amount of restitution that could not be paid because the employee(s) could not be located. The contract administrator will continue to attempt to locate the unfound workers for 3 years after the completion of the project. After 3 years, any amount remaining in the account for unfound workers will be credited and/or forwarded by the contract administrator to Housing which shall send it to HUD.

CHAPTER 3 LABOR STANDARDS DISPUTES, ADMINISTRATIVE REVIEWS, WITHHOLDING AND DEPOSITS AND ESCROW ACCOUNTS

WHAT HAPPENS WHEN THINGS GO WRONG?

3-1 **INTRODUCTION.** Even in the best of circumstances, things can go wrong In a Davis-Bacon context, "things going wrong" usually means there's a difference of opinion - a dispute - about whether and to what extent underpayments have occurred. These disputes are usually between the contract administrator and one or more employers (the prime contractor and/or a subcontractor). The dispute may involve something simple such as an additional classification request that is pending before the DOL, or something as significant as investigative findings following a complaint of underpayment This chapter discusses some of what you may expect and what you can do to make your views known and to lessen any delays

3-2 **ADMINISTRATIVE REVIEW ON LABOR STANDARDS DISPUTES.** As mentioned in the Introduction, above, a dispute about labor standards and compliance can arise for a number of reasons The labor standards clauses in your contract and DOL regulations provide for administrative review of issues where there is a difference of views between the contract administrator and any employer The most common circumstances include.

a. **Additional classifications and wage rates.** Additional classification and wage rate requests are sometimes denied by the DOL. An employer that is dissatisfied with the denial can request reconsideration by the DOL Wage and Hour Administrator. The employer may continue to pay the wage rate, as requested, until a final decision is rendered on the matter When the final decision is known, the employer will be required to pay any additional wages that may be necessary to satisfy the wage rate that is established

1) **Reconsideration.** . The DOL normally identifies the reasons for denial in its response to the request. Any interested person (*for example*, the contract administrator, employer, representatives of the employees) may request reconsideration on the decision on the additional classification request The request for reconsideration should be made in writing and should thoroughly address the denial reasons identified by the DOL Requests for reconsideration should be made through the contract administrator (*See ¶2-2(d), and also DOL Regulations 29 CFR 1 8.*)

2) **Administrative Review Board.** Any interested party may request a review of the Administrator's decision on reconsideration by the ***Administrative Review Board*** (*formerly, Wage Appeals Board*). DOL regulations 29 CFR Part 7 explain the procedures for such reviews (*See also 29 CFR 1.9.*)

b. **Findings of underpayment.** Compliance reviews and other investigations may result in findings of underpayment The primary goal in every case and at every step in this process is to reach agreements about who may have been underpaid and how much wage restitution may be due and, of course, to deliver restitution to any underpaid workers The contract administrator will usually work informally with you to reach such agreements. You will have an opportunity to provide additional information to the contract administrator that may explain apparent inconsistencies and/or resolve the discrepancies

If informal exchanges do not result in agreement, the final determination and schedule of wages due will be presented to you in writing and you will be permitted 30 days in which to correct the underpayment(s) *or* to request a hearing on the matter before the DOL The request for hearing should be made in writing and should explain what findings are in dispute and the reasons The

request should be made through the contract administrator. The contract administrator will submit a report of the findings and the hearing request to the DOL for review and further consideration.

3-3 **WITHHOLDING.** The contract administrator may cause withholding from payments due to the prime contractor to ensure the payment of wages which are believed to be due and unpaid, for example, if wage underpayments or other violations are not corrected within 30 days after notification to the prime contractor Withholding is considered to be serious and is not taken unless warranted. Very often, the amount kept in retention is sufficient to cover any back wage liability so withholding from payments is not considered necessary However, if withholding is deemed necessary, you will be notified in writing. Only the amounts necessary to meet the contractor's (and/or subcontractor's) liability shall be withheld.

> ⏲ Remember, the prime contractor is responsible and will be held liable for any wage restitution that is due to any worker employed in the construction of the project, including workers employed by subcontractors and any lower-tier subcontractors. *See ¶1-4, Responsibility of the Principal Contractor, and ¶2-8(a),Restitution for underpayment of wages*

3-4 **DEPOSITS AND ESCROWS.** In every case, we attempt to complete compliance actions and resolve any disputes before the project is completed and final payments are made. Sometimes, corrective actions or disputes continue after completion and provisions must be made to ensure that funds are available to pay any wage restitution that is ultimately found due. In these cases, we allow the project to proceed to final closings and payments ***provided*** the prime contractor deposits an amount equal to the potential liability for wage restitution and liquidated damages, if necessary, in a special account The deposit or *escrow account* is controlled by the contract administrator. When a final decision in rendered, the contract administrator makes disbursements from the account in accordance with the decision. Deposit/escrow accounts are established for one or more of the following reasons:

a. Where the parties have agreed to amounts of wage restitution that are due *but* the employer hasn't furnished evidence yet that all of the underpaid workers have received their back wages. The deposit is equal to the amount of restitution due to workers lacking payment evidence. As proper documentation is received, amounts corresponding to the documentation is returned to the depositor. Amounts for any workers who can not be located are held in the escrow account for three years and disbursed as described in ¶2-8(f) of this Guide.

b. Where underpayments are suspected or alleged and an investigation has not yet been completed The deposit is equal to the amount of wage restitution and any liquidated damages, if applicable, that is estimated to be due. If the final determination of wages due is less than the amount estimated and placed in the escrow account, the escrow will be reduced to the final amount and the difference will be returned to the depositor If the parties agree to the investigative findings, the amounts due to the workers will be disbursed from the escrow account in accordance with the schedule of wages due. Amounts for unfound workers will be retained as described above (*See ¶2-8(f) and 3-4(a))*

If the parties *do not* agree and an administrative hearing is requested, the escrow will be maintained as explained in ¶3-4(c), below

c Where the parties are waiting for the outcome of an administrative hearing that has been or will be filed contesting a final determination of wages due. The deposit shall be equal to the amount of wage restitution and liquidated damages, if applicable, that have been determined due. Once a final decision is rendered, disbursements from the escrow account are made in accordance with the decision.

3-5 **DEBARMENT.** Contractors and/or subcontractors that are found by the Secretary of Labor to be in aggravated or willful violation of the labor standards provisions of the Davis-Bacon and Related Acts (DBRA) will be ineligible (***debarred***) to participate in any DBRA or Davis-Bacon Act contracts for up to 3 years Debarment includes the contractor or subcontractor and any firm, corporation, partnership or association in which the contractor or subcontractor has a substantial interest Debarment proceedings can be recommended by the contractor administrator or can be initiated by the DOL on its motion. Debarment proceedings are described in DOL regulations 29 CFR 5 12.

Applicability

The Project or Program to which the construction work covered by this contract pertains is being assisted by the United States of America and the following Federal Labor Standards Provisions are included in this Contract pursuant to the provisions applicable to such Federal assistance

A. 1. (i) Minimum Wages. All laborers and mechanics employed or working upon the site of the work will be paid unconditionally and not less often than once a week, and without subsequent deduction or rebate on any account (except such payroll deductions as are permitted by regulations issued by the Secretary of Labor under the Copeland Act (29 CFR Part 3), the full amount of wages and bona fide fringe benefits (or cash equivalents thereof) due at time of payment computed at rates not less than those contained in the wage determination of the Secretary of Labor which is attached hereto and made a part hereof, regardless of any contractual relationship which may be alleged to exist between the contractor and such laborers and mechanics Contributions made or costs reasonably anticipated for bona fide fringe benefits under Section l(b)(2) of the Davis-Bacon Act on behalf of laborers or mechanics are considered wages paid to such laborers or mechanics, subject to the provisions of 29 CFR 5 5(a)(1)(iv), also, regular contributions made or costs incurred for more than a weekly period (but not less often than quarterly) under plans, funds, or programs, which cover the particular weekly period, are deemed to be constructively made or incurred during such weekly period.

Such laborers and mechanics shall be paid the appropriate wage rate and fringe benefits on the wage determination for the classification of work actually performed, without regard to skill, except as provided in 29 CFR 5 5(a)(4) Laborers or mechanics performing work in more than one classification may be compensated at the rate specified for each classification for the time actually worked therein Provided, That the employer's payroll records accurately set forth the time spent in each classification in which work is performed The wage determination (including any additional classification and wage rates conformed under 29 CFR 5 5(a)(1)(ii) and the Davis-Bacon poster (WH-1321) shall be posted at all times by the contractor and its subcontractors at the site of the work in a prominent and accessible, place where it can be easily seen by the workers.

(ii) (a) Any class of laborers or mechanics which is not listed in the wage determination and which is to be employed under the contract shall be classified in conformance with the wage determination. HUD shall approve an additional classification and wage rate and fringe benefits therefor only when the following criteria have been met:

(1) The work to be performed by the classification requested is not performed by a classification in the wage determination, and

(2) The classification is utilized in the area by the construction industry, and

(3) The proposed wage rate, including any bona fide fringe benefits, bears a reasonable relationship to the wage rates contained in the wage determination

(b) If the contractor and the laborers and mechanics to be employed in the classification (if known), or their representatives, and HUD or its designee agree on the classification and wage rate (including the amount designated for fringe benefits where appropriate), a report of the action taken shall be sent by HUD or its designee to the Administrator of the Wage and Hour Division, Employment Standards Administration, U S Department of Labor, Washington, D C 20210 The Administrator, or an authorized representative, will approve, modify, or disapprove every additional classification action within 30 days of receipt and so advise HUD or its designee or will notify HUD or its designee within the 30-day period that additional time is necessary (Approved by the Office of Management and Budget under OMB control number 1215-0140)

(c) In the event the contractor, the laborers or mechanics to be employed in the classification or their representatives, and HUD or its designee do not agree on the proposed classification and wage rate (including the amount designated for fringe benefits, where appropriate), HUD or its designee shall refer the questions, including the views of all interested parties and the recommendation of HUD or its designee, to the Administrator for determination The Administrator, or an authorized representative, will issue a determination within 30 days of receipt and so advise HUD or its designee or will notify HUD or its designee within the 30-day period that additional time is necessary (Approved by the Office of Management and Budget under OMB Control Number 1215-0140)

(d) The wage rate (including fringe benefits where appropriate) determined pursuant to subparagraphs (1)(ii)(b) or (c) of this paragraph, shall be paid to all workers performing work in the classification under this contract from the first day on which work is performed in the classification.

(iii) Whenever the minimum wage rate prescribed in the contract for a class of laborers or mechanics includes a fringe benefit which is not expressed as an hourly rate, the contractor shall either pay the benefit as stated in the wage determination or shall pay another bona fide fringe benefit or an hourly cash equivalent thereof

(iv) If the contractor does not make payments to a trustee or other third person, the contractor may consider as part of the wages of any laborer or mechanic the amount of any costs reasonably anticipated in providing bona fide fringe benefits under a plan or program, Provided, That the Secretary of Labor has found, upon the written request of the contractor, that the applicable standards of the Davis-Bacon Act have been met. The Secretary of Labor may require the contractor to set aside in a separate account assets for the meeting of obligations under the plan or program (Approved by the Office of Management and Budget under OMB Control Number 1215-0140)

2. Withholding. HUD or its designee shall upon its own action or upon written request of an authorized representative of the Department of Labor withhold or cause to be withheld from the contractor under this contract or any other Federal contract with the same prime contractor, or any other Federally-assisted contract subject to Davis-Bacon prevailing wage requirements, which is held by the same prime contractor so much of the accrued payments or advances as may be considered necessary to pay laborers and mechanics, including apprentices, trainees and helpers, employed by the contractor or any subcontractor the full amount of wages required by the contract. In the event of failure to pay any laborer or mechanic, including any apprentice, trainee or helper, employed or working on the site of the work, all or part

of the wages required by the contract, HUD or its designee may, after written notice to the contractor, sponsor, applicant, or owner, take such action as may be necessary to cause the suspension of any further payment, advance, or guarantee of funds until such violations have ceased. HUD or its designee may, after written notice to the contractor, disburse such amounts withheld for and on account of the contractor or subcontractor to the respective employees to whom they are due The Comptroller General shall make such disbursements in the case of direct Davis-Bacon Act contracts

3. (i) Payrolls and basic records. Payrolls and basic records relating thereto shall be maintained by the contractor during the course of the work preserved for a period of three years thereafter for all laborers and mechanics working at the site of the work Such records shall contain the name, address, and social security number of each such worker, his or her correct classification, hourly rates of wages paid (including rates of contributions or costs anticipated for bona fide fringe benefits or cash equivalents thereof of the types described in Section l(b)(2)(B) of the Davis-bacon Act), daily and weekly number of hours worked, deductions made and actual wages paid. Whenever the Secretary of Labor has found under 29 CFR 5 5 (a)(1)(iv) that the wages of any laborer or mechanic include the amount of any costs reasonably anticipated in providing benefits under a plan or program described in Section l(b)(2)(B) of the Davis-Bacon Act, the contractor shall maintain records which show that the commitment to provide such benefits is enforceable, that the plan or program is financially responsible, and that the plan or program has been communicated in writing to the laborers or mechanics affected, and records which show the costs anticipated or the actual cost incurred in providing such benefits. Contractors employing apprentices or trainees under approved programs shall maintain written evidence of the registration of apprenticeship programs and certification of trainee programs, the registration of the apprentices and trainees, and the ratios and wage rates prescribed in the applicable programs (Approved by the Office of Management and Budget under OMB Control Numbers 1215-0140 and 1215-0017)

(ii) (a) The contractor shall submit weekly for each week in which any contract work is performed a copy of all payrolls to HUD or its designee if the agency is a party to the contract, but if the agency is not such a party, the contractor will submit the payrolls to the applicant sponsor, or owner, as the case may be, for transmission to HUD or its designee. The payrolls submitted shall set out accurately and completely all of the information required to be maintained under 29 CFR 5 5(a)(3)(i). This information may be submitted in any form desired Optional Form WH-347 is available for this purpose and may be purchased from the Superintendent of Documents (Federal Stock Number 029-005-00014-1), U S Government Printing Office, Washington, DC 20402 The prime contractor is responsible for the submission of copies of payrolls by all subcontractors (Approved by the Office of Management and Budget under OMB Control Number 1215-0149.)

(b) Each payroll submitted shall be accompanied by a "Statement of Compliance," signed by the contractor or subcontractor or his or her agent who pays or supervises the payment of the persons employed under the contract and shall certify the following

(1) That the payroll for the payroll period contains the information required to be maintained under 29 CFR 5 5 (a)(3)(i) and that such information is correct and complete,

(2) That each laborer or mechanic (including each helper, apprentice, and trainee) employed on the contract during the payroll period has been paid the full weekly wages earned, without rebate, either directly or indirectly, and that no deductions have been made either directly or indirectly from the full wages earned, other than permissible deductions as set forth in 29 CFR Part 3,

(3) That each laborer or mechanic has been paid not less than the applicable wage rates and fringe benefits or cash equivalents for the classification of work performed, as specified in the applicable wage determination incorporated into the contract

(c) The weekly submission of a properly executed certification set forth on the reverse side of Optional Form WH-347 shall satisfy the requirement for submission of the "Statement of Compliance" required by subparagraph A 3 (ii)(b)

(d) The falsification of any of the above certifications may subject the contractor or subcontractor to civil or criminal prosecution under Section 1001 of Title 18 and Section 231 of Title 31 of the United States Code.

(iii) The contractor or subcontractor shall make the records required under subparagraph A 3 (i) available for inspection, copying, or transcription by authorized representatives of HUD or its designee or the Department of Labor, and shall permit such representatives to interview employees during working hours on the job If the contractor or subcontractor fails to submit the required records or to make them available, HUD or its designee may, after written notice to the contractor, sponsor, applicant or owner, take such action as may be necessary to cause the suspension of any further payment, advance, or guarantee of funds Furthermore, failure to submit the required records upon request or to make such records available may be grounds for debarment action pursuant to 29 CFR 5 12

4. Apprentices and Trainees.

(i) Apprentices. Apprentices will be permitted to work at less than the predetermined rate for the work they performed when they are employed pursuant to and individually registered in a bona fide apprenticeship program registered with the U S Department of Labor, Employment and Training Administration, Office of Apprenticeship Training, Employer and Labor Services, or with a State Apprenticeship Agency recognized by the Office, or if a person is employed in his or her first 90 days of probationary employment as an apprentice in such an apprenticeship program, who is not individually registered in the program, but who has been certified by the Office of Apprenticeship Training, Employer and Labor Services or a State Apprenticeship Agency (where appropriate) to be eligible for probationary employment as an apprentice. The allowable ratio of apprentices to journeymen on the job site in any craft classification shall not be greater than the ratio permitted to the contractor as to the entire work force under the registered program Any worker listed on a payroll at an apprentice wage rate, who is not registered or otherwise employed as stated above, shall be paid not less than the applicable wage rate on the wage determination for the classification of work actually performed. In addition, any apprentice performing work on the job site in excess of the ratio permitted under the registered program shall be paid not less than the applicable wage rate on the wage determination for the work actually performed Where a contractor is performing construction on a project in a locality other than that in which its program is registered, the ratios and wage rates (expressed in percentages of the journeyman's hourly rate) specified in the contractor's or subcontractor's registered program shall be observed Every apprentice must be paid at not less than the rate specified in the registered program for the apprentice's level of progress, expressed as a percentage of the

journeymen hourly rate specified in the applicable wage determination Apprentices shall be paid fringe benefits in accordance with the provisions of the apprenticeship program If the apprenticeship program does not specify fringe benefits, apprentices must be paid the full amount of fringe benefits listed on the wage determination for the applicable classification If the Administrator determines that a different practice prevails for the applicable apprentice classification, fringes shall be paid in accordance with that determination. In the event the Office of Apprenticeship Training, Employer and Labor Services, or a State Apprenticeship Agency recognized by the Office, withdraws approval of an apprenticeship program, the contractor will no longer be permitted to utilize apprentices at less than the applicable predetermined rate for the work performed until an acceptable program is approved

(ii) Trainees. Except as provided in 29 CFR 5 16, trainees will not be permitted to work at less than the predetermined rate for the work performed unless they are employed pursuant to and individually registered in a program which has received prior approval, evidenced by formal certification by the U S Department of Labor, Employment and Training Administration. The ratio of trainees to journeymen on the job site shall not be greater than permitted under the plan approved by the Employment and Training Administration Every trainee must be paid at not less than the rate specified in the approved program for the trainee's level of progress, expressed as a percentage of the journeyman hourly rate specified in the applicable wage determination Trainees shall be paid fringe benefits in accordance with the provisions of the trainee program If the trainee program does not mention fringe benefits, trainees shall be paid the full amount of fringe benefits listed on the wage determination unless the Administrator of the Wage and Hour Division determines that there is an apprenticeship program associated with the corresponding journeyman wage rate on the wage determination which provides for less than full fringe benefits for apprentices Any employee listed on the payroll at a trainee rate who is not registered and participating in a training plan approved by the Employment and Training Administration shall be paid not less than the applicable wage rate on the wage determination for the work actually performed In addition, any trainee performing work on the job site in excess of the ratio permitted under the registered program shall be paid not less than the applicable wage rate on the wage determination for the work actually performed In the event the Employment and Training Administration withdraws approval of a training program, the contractor will no longer be permitted to utilize trainees at less than the applicable predetermined rate for the work performed until an acceptable program is approved

(iii) Equal employment opportunity. The utilization of apprentices, trainees and journeymen under 29 CFR Part 5 shall be in conformity with the equal employment opportunity requirements of Executive Order 11246, as amended, and 29 CFR Part 30

5. Compliance with Copeland Act requirements. The contractor shall comply with the requirements of 29 CFR Part 3 which are incorporated by reference in this contract

6. Subcontracts. The contractor or subcontractor will insert in any subcontracts the clauses contained in subparagraphs 1 through 11 of this paragraph A and such other clauses as HUD or its designee may by appropriate instructions require, and a copy of the applicable prevailing wage decision, and also a clause requiring the subcontractors to include these clauses in any lower tier subcontracts The prime contractor shall be responsible for the compliance by any subcontractor or lower tier subcontractor with all the contract clauses in this paragraph

7. Contract termination; debarment. A breach of the contract clauses in 29 CFR 5 5 may be grounds for termination of the contract and for debarment as a contractor and a subcontractor as provided in 29 CFR 5 12

8. Compliance with Davis-Bacon and Related Act Requirements. All rulings and interpretations of the Davis-Bacon and Related Acts contained in 29 CFR Parts 1, 3, and 5 are herein incorporated by reference in this contract

9. Disputes concerning labor standards. Disputes arising out of the labor standards provisions of this contract shall not be subject to the general disputes clause of this contract Such disputes shall be resolved in accordance with the procedures of the Department of Labor set forth in 29 CFR Parts 5, 6, and 7. Disputes within the meaning of this clause include disputes between the contractor (or any of its subcontractors) and HUD or its designee, the U S. Department of Labor, or the employees or their representatives

10. (i) Certification of Eligibility. By entering into this contract the contractor certifies that neither it (nor he or she) nor any person or firm who has an interest in the contractor's firm is a person or firm ineligible to be awarded Government contracts by virtue of Section 3(a) of the Davis-Bacon Act or 29 CFR 5 12(a)(1) or to be awarded HUD contracts or participate in HUD programs pursuant to 24 CFR Part 24

(ii) No part of this contract shall be subcontracted to any person or firm ineligible for award of a Government contract by virtue of Section 3(a) of the Davis-Bacon Act or 29 CFR 5.12(a)(1) or to be awarded HUD contracts or participate in HUD programs pursuant to 24 CFR Part 24

(iii) The penalty for making false statements is prescribed in the U S Criminal Code, 18 U S C 1001 Additionally, U S Criminal Code, Section 1 01 0, Title 18, U S C , "Federal Housing Administration transactions", provides in part "Whoever, for the purpose of influencing in any way the action of such Administration. makes, utters or publishes any statement knowing the same to be false shall be fined not more than $5,000 or imprisoned not more than two years, or both "

11. Complaints, Proceedings, or Testimony by Employees. No laborer or mechanic to whom the wage, salary, or other labor standards provisions of this Contract are applicable shall be discharged or in any other manner discriminated against by the Contractor or any subcontractor because such employee has filed any complaint or instituted or caused to be instituted any proceeding or has testified or is about to testify in any proceeding under or relating to the labor standards applicable under this Contract to his employer.

B. Contract Work Hours and Safety Standards Act. The provisions of this paragraph B are applicable only where the amount of the prime contract exceeds $100,000. As used in this paragraph, the terms "laborers" and "mechanics" include watchmen and guards

(1) Overtime requirements. No contractor or subcontractor contracting for any part of the contract work which may require or involve the employment of laborers or mechanics shall require or permit any such laborer or mechanic in any workweek in which he or she is employed on such work to work in excess of 40 hours in such workweek unless such laborer or mechanic receives compensation at a rate not less than one and one-half times the basic rate of pay for all hours worked in excess of 40 hours in such workweek

(2) Violation; liability for unpaid wages; liquidated damages. In the event of any violation of the clause set forth in subpara-

graph (1) of this paragraph, the contractor and any subcontractor responsible therefor shall be liable for the unpaid wages In addition, such contractor and subcontractor shall be liable to the United States (in the case of work done under contract for the District of Columbia or a territory, to such District or to such territory), for liquidated damages Such liquidated damages shall be computed with respect to each individual laborer or mechanic, including watchmen and guards, employed in violation of the clause set forth in subparagraph (1) of this paragraph, in the sum of $10 for each calendar day on which such individual was required or permitted to work in excess of the standard workweek of 40 hours without payment of the overtime wages required by the clause set forth in sub paragraph (1) of this paragraph

(3) Withholding for unpaid wages and liquidated damages. HUD or its designee shall upon its own action or upon written request of an authorized representative of the Department of Labor withhold or cause to be withheld, from any moneys payable on account of work performed by the contractor or subcontractor under any such contract or any other Federal contract with the same prime contract, or any other Federally-assisted contract subject to the Contract Work Hours and Safety Standards Act which is held by the same prime contractor such sums as may be determined to be necessary to satisfy any liabilities of such contractor or subcontractor for unpaid wages and liquidated damages as provided in the clause set forth in subparagraph (2) of this paragraph

(4) Subcontracts. The contractor or subcontractor shall insert in any subcontracts the clauses set forth in subparagraph (1) through (4) of this paragraph and also a clause requiring the subcontractors to include these clauses in any lower tier subcontracts The prime contractor shall be responsible for compliance by any subcontractor or lower tier subcontractor with the clauses set forth in subparagraphs (1) through (4) of this paragraph

C. Health and Safety. The provisions of this paragraph C are applicable only where the amount of the prime contract exceeds $100,000

(1) No laborer or mechanic shall be required to work in surroundings or under working conditions which are unsanitary, hazardous, or dangerous to his health and safety as determined under construction safety and health standards promulgated by the Secretary of Labor by regulation

(2) The Contractor shall comply with all regulations issued by the Secretary of Labor pursuant to Title 29 Part 1926 and failure to comply may result in imposition of sanctions pursuant to the Contract Work Hours and Safety Standards Act, 40 USC 3701 et seq

(3) The Contractor shall include the provisions of this paragraph in every subcontract so that such provisions will be binding on each subcontractor The Contractor shall take such action with respect to any subcontract as the Secretary of Housing and Urban Development or the Secretary of Labor shall direct as a means of enforcing such provisions

GLENDALE

E- VERIFICATION

To Whom It May Concern:

On behalf of the City of Glendale, we would like to thank you for doing business with us. As part of our business practice review, and a new state law which took effect October 1, 2008, we are requesting that companies who currently have contracts with the City of Glendale, Engineering Division, provide documentation that they have registered with the E-Verify System & DUNS (see attached). E-Verify should also include any/all subcontractors and their employees.

The E-Verify System is currently free to employers. In order to participate, an employer is required to register online and accept the electronic Memorandum of Understanding, which specifies the responsibilities of the Social Security Administration, United States Citizenship and Immigration Services and the employer. You can find more information about this new law at the Arizona Attorney General website on employer sanctions law at: www.azag.gov/LegalAZWorkersAct/index.html.

Please submit your verification to the City of Glendale, Engineering Department Office by fax: Attn: Michael Johnson 623-915-2861 immediately.

If you have any questions or concerns, please do not hesitate to contract the Engineering Department Office at 623-930-3630.

Thank you for your cooperation.

Sincerely,

City of Glendale
Engineering Department

DUNS NUMBER REQUIREMENT Q & A

What is a DUNS number?

DUNS stands for "data universal numbering system." DUNS numbers are issued by Dun and Bradstret (D&B) and consist of nine digits.

Why do I need to provide it?

DUNS number is a way to keep track of how federal grant money is dispersed.

How do I obtain a DUNS number?

There are two ways to obtain a DUNS number. You can use the special toll free number 1-866-705-5711.

The process will take about ten minutes and you will receive your DUNS number within a couple of days.

When you call tell them you are a federal government contractor and need to register for a DUNS number. You will be asked to provide the following information:

1. Name of business
2. Address
3. Telephone number
4. Name of the head of the business (CEO, president, director, etc.)
5. Type of business
6. Total number of employees (full & part-time)

Your business can also register for a DUNS number via Dun & Bradstreet's website at http://Fedgov.dnb.com/webform. Please note that registration via the website may take up to thirty business days to complete.

Is there a fee for registering for a DUNS number?

No. D&B should not charge a fee. You are also not obligated to purchase any of their products.

Why do I need a DUNS number?

New regulations took affect Oct. 1, 2003 mandate that a DUNS number be provided. The DUNS number will offer a way for the federal government to better match information across all agencies.

We are a contractor utilizing grant funding so we obviously need a DUNS number, but we don't want to be included in any marketing list. What can we do?

Inclusion on a D&B marketing list is optional. If you do not want your name/business included on this marketing list request to be de-listed from D&B marketing files when you are speaking with a D&B representative during your DUNS number telephone application.

Yes. Individuals are exempt

Company ID Number: _____

THE E-VERIFY PROGRAM FOR EMPLOYMENT VERIFICATION MEMORANDUM OF UNDERSTANDING

ARTICLE I

PURPOSE AND AUTHORITY

This Memorandum of Understanding (MOU) sets forth the points of agreement between the Department of Homeland Security (DHS) and _____ (Employer) regarding the Employer's participation in the Employment Eligibility Verification Program (E-Verify) This MOU explains certain features of the E-Verify program and enumerates specific responsibilities of DHS, the Social Security Administration (SSA), and the Employer. E-Verify is a program that electronically confirms an employee's eligibility to work in the United States after completion of the Employment Eligibility Verification Form (Form I-9). For covered government contractors, E-Verify is used to verify the employment eligibility of all newly hired employees and all existing employees assigned to Federal contracts.

Authority for the E-Verify program is found in Title IV, Subtitle A, of the Illegal Immigration Reform and Immigrant Responsibility Act of 1996 (IIRIRA), Pub. L. 104-208, 110 Stat. 3009, as amended (8 U.S.C. § 1324a note) Authority for use of the E-Verify program by Federal contractors and subcontractors covered by the terms of Subpart 22 18, "Employment Eligibility Verification", of the Federal Acquisition Regulation (FAR) (hereinafter referred to in this MOU as a "Federal contractor") to verify the employment eligibility of certain employees working on Federal contracts is also found in Subpart 22.18 and in Executive Order 12989, as amended.

ARTICLE II

FUNCTIONS TO BE PERFORMED

A. RESPONSIBILITIES OF SSA

1. SSA agrees to provide the Employer with available information that allows the Employer to confirm the accuracy of Social Security Numbers provided by all employees verified under this MOU and the employment authorization of U.S. citizens.

2. SSA agrees to provide to the Employer appropriate assistance with operational problems that may arise during the Employer's participation in the E-Verify program. SSA agrees to provide the Employer with names, titles, addresses, and telephone numbers of SSA representatives to be contacted during the E-Verify process.

3. SSA agrees to safeguard the information provided by the Employer through the E-Verify program procedures, and to limit access to such information, as is appropriate by law, to individuals responsible for the verification of Social Security Numbers and for evaluation of the E-Verify program or such other persons or entities who may be authorized by SSA as governed by the Privacy Act (5 U.S.C. § 552a), the Social Security Act (42 U.S.C. 1306(a)), and SSA regulations (20 CFR Part 401).

Company ID Number: _____

4. SSA agrees to provide a means of automated verification that is designed (in conjunction with DHS's automated system if necessary) to provide confirmation or tentative nonconfirmation of U S citizens' employment eligibility within 3 Federal Government work days of the initial inquiry

5. SSA agrees to provide a means of secondary verification (including updating SSA records as may be necessary) for employees who contest SSA tentative nonconfirmations that is designed to provide final confirmation or nonconfirmation of U S citizens' employment eligibility and accuracy of SSA records for both citizens and aliens within 10 Federal Government work days of the date of referral to SSA, unless SSA determines that more than 10 days may be necessary In such cases, SSA will provide additional verification instructions

B. RESPONSIBILITIES OF DHS

1. After SSA verifies the accuracy of SSA records for aliens through E-Verify, DHS agrees to provide the Employer access to selected data from DHS's database to enable the Employer to conduct, to the extent authorized by this MOU·

- Automated verification checks on alien employees by electronic means, and
- Photo verification checks (when available) on employees.

2. DHS agrees to provide to the Employer appropriate assistance with operational problems that may arise during the Employer's participation in the E-Verify program. DHS agrees to provide the Employer names, titles, addresses, and telephone numbers of DHS representatives to be contacted during the E-Verify process.

3. DHS agrees to provide to the Employer a manual (the E-Verify User Manual) containing instructions on E-Verify policies, procedures and requirements for both SSA and DHS, including restrictions on the use of E-Verify. DHS agrees to provide training materials on E-Verify.

4. DHS agrees to provide to the Employer a notice, which indicates the Employer's participation in the E-Verify program. DHS also agrees to provide to the Employer anti-discrimination notices issued by the Office of Special Counsel for Immigration-Related Unfair Employment Practices (OSC), Civil Rights Division, U.S. Department of Justice

5 DHS agrees to issue the Employer a user identification number and password that permits the Employer to verify information provided by alien employees with DHS's database.

6. DHS agrees to safeguard the information provided to DHS by the Employer, and to limit access to such information to individuals responsible for the verification of alien employment eligibility and for evaluation of the E-Verify program, or to such other persons or entities as may be authorized by applicable law. Information will be used only to verify the accuracy of Social Security Numbers and employment eligibility, to enforce the Immigration and Nationality Act (INA) and Federal criminal laws, and to administer Federal contracting requirements.

7. DHS agrees to provide a means of automated verification that is designed (in conjunction with SSA verification procedures) to provide confirmation or tentative nonconfirmation of employees' employment eligibility within 3 Federal Government work days of the initial inquiry

Company ID Number: _____

8. DHS agrees to provide a means of secondary verification (including updating DHS records as may be necessary) for employees who contest DHS tentative nonconfirmations and photo non-match tentative nonconfirmations that is designed to provide final confirmation or nonconfirmation of the employees' employment eligibility within 10 Federal Government work days of the date of referral to DHS, unless DHS determines that more than 10 days may be necessary. In such cases, DHS will provide additional verification instructions.

C. RESPONSIBILITIES OF THE EMPLOYER

1 The Employer agrees to display the notices supplied by DHS in a prominent place that is clearly visible to prospective employees and all employees who are to be verified through the system.

2. The Employer agrees to provide to the SSA and DHS the names, titles, addresses, and telephone numbers of the Employer representatives to be contacted regarding E-Verify.

3. The Employer agrees to become familiar with and comply with the most recent version of the E-Verify User Manual.

4. The Employer agrees that any Employer Representative who will perform employment verification queries will complete the E-Verify Tutorial before that individual initiates any queries.

A. The Employer agrees that all Employer representatives will take the refresher tutorials initiated by the E-Verify program as a condition of continued use of E-Verify, including any tutorials for Federal contractors if the Employer is a Federal contractor.

B. Failure to complete a refresher tutorial will prevent the Employer from continued use of the program.

5 The Employer agrees to comply with current Form I-9 procedures, with two exceptions:

- If an employee presents a "List B" identity document, the Employer agrees to only accept "List B" documents that contain a photo. (List B documents identified in 8 C.F.R § 274a 2(b)(1)(B)) can be presented during the Form I-9 process to establish identity.) If an employee objects to the photo requirement for religious reasons, the Employer should contact E-Verify at 888-464-4218.
- If an employee presents a DHS Form I-551 (Permanent Resident Card) or Form I-766 (Employment Authorization Document) to complete the Form I-9, the Employer agrees to make a photocopy of the document and to retain the photocopy with the employee's Form I-9. The employer will use the photocopy to verify the photo and to assist DHS with its review of photo non-matches that are contested by employees. Note that employees retain the right to present any List A, or List B and List C, documentation to complete the Form I-9. DHS may in the future designate other documents that activate the photo screening tool.

6. The Employer understands that participation in E-Verify does not exempt the Employer from the responsibility to complete, retain, and make available for inspection Forms I-9 that relate to its employees, or from other requirements of applicable regulations or laws, including

the obligation to comply with the antidiscrimination requirements of section 274B of the INA with respect to Form I-9 procedures, except for the following modified requirements applicable by reason of the Employer's participation in E-Verify· (1) identity documents must have photos, as described in paragraph 5 above; (2) a rebuttable presumption is established that the Employer has not violated section 274A(a)(1)(A) of the Immigration and Nationality Act (INA) with respect to the hiring of any individual if it obtains confirmation of the identity and employment eligibility of the individual in compliance with the terms and conditions of E-Verify; (3) the Employer must notify DHS if it continues to employ any employee after receiving a final nonconfirmation, and is subject to a civil money penalty between $550 and $1,100 for each failure to notify DHS of continued employment following a final nonconfirmation, (4) the Employer is subject to a rebuttable presumption that it has knowingly employed an unauthorized alien in violation of section 274A(a)(1)(A) if the Employer continues to employ an employee after receiving a final nonconfirmation, and (5) no person or entity participating in E-Verify is civilly or criminally liable under any law for any action taken in good faith based on information provided through the confirmation system. DHS reserves the right to conduct Form I-9 compliance inspections during the course of E-Verify, as well as to conduct any other enforcement activity authorized by law

7 The Employer agrees to initiate E-Verify verification procedures for new employees within 3 Employer business days after each employee has been hired (but after both sections 1 and 2 of the Form I-9 have been completed), and to complete as many (but only as many) steps of the E-Verify process as are necessary according to the E-Verify User Manual The Employer is prohibited from initiating verification procedures before the employee has been hired and the Form I-9 completed If the automated system to be queried is temporarily unavailable, the 3-day time period is extended until it is again operational in order to accommodate the Employer's attempting, in good faith, to make inquiries during the period of unavailability In all cases, the Employer must use the SSA verification procedures first, and use DHS verification procedures and photo screening tool only after the SSA verification response has been given. Employers may initiate verification by notating the Form I-9 in circumstances where the employee has applied for a Social Security Number (SSN) from the SSA and is waiting to receive the SSN, provided that the Employer performs an E-Verify employment verification query using the employee's SSN as soon as the SSN becomes available

8. The Employer agrees not to use E-Verify procedures for pre-employment screening of job applicants, in support of any unlawful employment practice, or for any other use not authorized by this MOU. Employers must use E-Verify for all new employees, unless an Employer is a Federal contractor that qualifies for the exceptions described in Article II.D.1.c Except as provided in Article II.D, the Employer will not verify selectively and will not verify employees hired before the effective date of this MOU. The Employer understands that if the Employer uses E-Verify procedures for any purpose other than as authorized by this MOU, the Employer may be subject to appropriate legal action and termination of its access to SSA and DHS information pursuant to this MOU.

9. The Employer agrees to follow appropriate procedures (see Article III. below) regarding tentative nonconfirmations, including notifying employees of the finding, providing written referral instructions to employees, allowing employees to contest the finding, and not taking adverse action against employees if they choose to contest the finding. Further, when employees contest a tentative nonconfirmation based upon a photo non-match, the Employer is required to take affirmative steps (see Article III B below) to contact DHS with information necessary to resolve the challenge

Company ID Number: _____

10. The Employer agrees not to take any adverse action against an employee based upon the employee's perceived employment eligibility status while SSA or DHS is processing the verification request unless the Employer obtains knowledge (as defined in 8 C.F.R. § 274a.1(l)) that the employee is not work authorized The Employer understands that an initial inability of the SSA or DHS automated verification system to verify work authorization, a tentative nonconfirmation, a case in continuance (indicating the need for additional time for the government to resolve a case), or the finding of a photo non-match, does not establish, and should not be interpreted as evidence, that the employee is not work authorized. In any of the cases listed above, the employee must be provided a full and fair opportunity to contest the finding, and if he or she does so, the employee may not be terminated or suffer any adverse employment consequences based upon the employee's perceived employment eligibility status (including denying, reducing, or extending work hours, delaying or preventing training, requiring an employee to work in poorer conditions, refusing to assign the employee to a Federal contract or other assignment, or otherwise subjecting an employee to any assumption that he or she is unauthorized to work) until and unless secondary verification by SSA or DHS has been completed and a final nonconfirmation has been issued. If the employee does not choose to contest a tentative nonconfirmation or a photo non-match or if a secondary verification is completed and a final nonconfirmation is issued, then the Employer can find the employee is not work authorized and terminate the employee's employment. Employers or employees with questions about a final nonconfirmation may call E-Verify at 1-888-464-4218 or OSC at 1-800-255-8155 or 1-800-237-2515 (TDD).

11 The Employer agrees to comply with Title VII of the Civil Rights Act of 1964 and section 274B of the INA by not discriminating unlawfully against any individual in hiring, firing, or recruitment or referral practices because of his or her national origin or, in the case of a protected individual as defined in section 274B(a)(3) of the INA, because of his or her citizenship status. The Employer understands that such illegal practices can include selective verification or use of E-Verify except as provided in part D below, or discharging or refusing to hire employees because they appear or sound "foreign" or have received tentative nonconfirmations. The Employer further understands that any violation of the unfair immigration-related employment practices provisions in section 274B of the INA could subject the Employer to civil penalties, back pay awards, and other sanctions, and violations of Title VII could subject the Employer to back pay awards, compensatory and punitive damages Violations of either section 274B of the INA or Title VII may also lead to the termination of its participation in E-Verify. If the Employer has any questions relating to the anti-discrimination provision, it should contact OSC at 1-800-255-8155 or 1-800-237-2515 (TDD).

12. The Employer agrees to record the case verification number on the employee's Form I-9 or to print the screen containing the case verification number and attach it to the employee's Form I-9.

13. The Employer agrees that it will use the information it receives from SSA or DHS pursuant to E-Verify and this MOU only to confirm the employment eligibility of employees as authorized by this MOU The Employer agrees that it will safeguard this information, and means of access to it (such as PINS and passwords) to ensure that it is not used for any other purpose and as necessary to protect its confidentiality, including ensuring that it is not disseminated to any person other than employees of the Employer who are authorized to perform the Employer's responsibilities under this MOU, except for such dissemination as may be

Company ID Number: _____

authorized in advance by SSA or DHS for legitimate purposes

14. The Employer acknowledges that the information which it receives from SSA is governed by the Privacy Act (5 U.S C. § 552a(i)(1) and (3)) and the Social Security Act (42 U S C. 1306(a)), and that any person who obtains this information under false pretenses or uses it for any purpose other than as provided for in this MOU may be subject to criminal penalties.

15. The Employer agrees to cooperate with DHS and SSA in their compliance monitoring and evaluation of E-Verify, including by permitting DHS and SSA, upon reasonable notice, to review Forms I-9 and other employment records and to interview it and its employees regarding the Employer's use of E-Verify, and to respond in a timely and accurate manner to DHS requests for information relating to their participation in E-Verify

D. RESPONSIBILITIES OF FEDERAL CONTRACTORS

1. The Employer understands that if it is a Federal contractor subject to the employment verification terms in Subpart 22 18 of the FAR it must verify the employment eligibility of any "employee assigned to the contract" (as defined in FAR 22 1801) in addition to verifying the employment eligibility of all other employees required to be verified under the FAR. Once an employee has been verified through E-Verify by the Employer, the Employer may not reverify the employee through E-Verify

a. Federal contractors not enrolled at the time of contract award: An Employer that is not enrolled in E-Verify as a Federal contractor at the time of a contract award must enroll as a Federal contractor in the E-Verify program within 30 calendar days of contract award and, within 90 days of enrollment, begin to use E-Verify to initiate verification of employment eligibility of new hires of the Employer who are working in the United States, whether or not assigned to the contract. Once the Employer begins verifying new hires, such verification of new hires must be initiated within 3 business days after the date of hire Once enrolled in E-Verify as a Federal contractor, the Employer must initiate verification of employees assigned to the contract within 90 calendar days after the date of enrollment or within 30 days of an employee's assignment to the contract, whichever date is later.

b Federal contractors already enrolled at the time of a contract award: Employers enrolled in E-Verify as a Federal contractor for 90 days or more at the time of a contract award must use E-Verify to initiate verification of employment eligibility for new hires of the Employer who are working in the United States, whether or not assigned to the contract, within 3 business days after the date of hire If the Employer is enrolled in E-Verify as a Federal contractor for 90 calendar days or less at the time of contract award, the Employer must, within 90 days of enrollment, begin to use E-Verify to initiate verification of new hires of the contractor who are working in the United States, whether or not assigned to the contract Such verification of new hires must be initiated within 3 business days after the date of hire. An Employer enrolled as a Federal contractor in E-Verify must initiate verification of each employee assigned to the contract within 90 calendar days after date of contract award or within 30 days after assignment to the contract, whichever is later.

c. Institutions of higher education, State, local and tribal governments and sureties: Federal contractors that are institutions of higher education (as defined at 20 U.S.C. 1001(a)), State or local governments, governments of Federally recognized Indian tribes, or sureties

performing under a takeover agreement entered into with a Federal agency pursuant to a performance bond may choose to only verify new and existing employees assigned to the Federal contract. Such Federal contractors may, however, elect to verify all new hires, and/or all existing employees hired after November 6, 1986 The provisions of Article II.D, paragraphs 1 a and 1.b of this MOU providing timeframes for initiating employment verification of employees assigned to a contract apply to such institutions of higher education, State, local and tribal governments, and sureties.

d. Verification of all employees: Upon enrollment, Employers who are Federal contractors may elect to verify employment eligibility of all existing employees working in the United States who were hired after November 6, 1986, instead of verifying only those employees assigned to a covered Federal contract. After enrollment, Employers must elect to do so only in the manner designated by DHS and initiate E-Verify verification of all existing employees within 180 days after the election.

e Form I-9 procedures for Federal contractors: The Employer may use a previously completed Form I-9 as the basis for initiating E-Verify verification of an employee assigned to a contract as long as that Form I-9 is complete (including the SSN), complies with Article II.C 5, the employee's work authorization has not expired, and the Employer has reviewed the information reflected in the Form I-9 either in person or in communications with the employee to ensure that the employee's stated basis in section 1 of the Form I-9 for work authorization has not changed (including, but not limited to, a lawful permanent resident alien having become a naturalized U.S. citizen). If the Employer is unable to determine that the Form I-9 complies with Article II C 5, if the employee's basis for work authorization as attested in section 1 has expired or changed, or if the Form I-9 contains no SSN or is otherwise incomplete, the Employer shall complete a new I-9 consistent with Article II.C.5, or update the previous I-9 to provide the necessary information If section 1 of the Form I-9 is otherwise valid and up-to-date and the form otherwise complies with Article II.C.5, but reflects documentation (such as a U.S passport or Form I-551) that expired subsequent to completion of the Form I-9, the Employer shall not require the production of additional documentation, or use the photo screening tool described in Article II.C.5, subject to any additional or superseding instructions that may be provided on this subject in the E-Verify User Manual. Nothing in this section shall be construed to require a second verification using E-Verify of any assigned employee who has previously been verified as a newly hired employee under this MOU, or to authorize verification of any existing employee by any Employer that is not a Federal contractor.

2. The Employer understands that if it is a Federal contractor, its compliance with this MOU is a performance requirement under the terms of the Federal contract or subcontract, and the Employer consents to the release of information relating to compliance with its verification responsibilities under this MOU to contracting officers or other officials authorized to review the Employer's compliance with Federal contracting requirements

ARTICLE III

REFERRAL OF INDIVIDUALS TO SSA AND DHS

A. REFERRAL TO SSA

Company ID Number: _____

1 If the Employer receives a tentative nonconfirmation issued by SSA, the Employer must print the tentative nonconfirmation notice as directed by the automated system and provide it to the employee so that the employee may determine whether he or she will contest the tentative nonconfirmation.

2. The Employer will refer employees to SSA field offices only as directed by the automated system based on a tentative nonconfirmation, and only after the Employer records the case verification number, reviews the input to detect any transaction errors, and determines that the employee contests the tentative nonconfirmation. The Employer will transmit the Social Security Number to SSA for verification again if this review indicates a need to do so. The Employer will determine whether the employee contests the tentative nonconfirmation as soon as possible after the Employer receives it.

3. If the employee contests an SSA tentative nonconfirmation, the Employer will provide the employee with a system-generated referral letter and instruct the employee to visit an SSA office within 8 Federal Government work days. SSA will electronically transmit the result of the referral to the Employer within 10 Federal Government work days of the referral unless it determines that more than 10 days is necessary. The Employer agrees to check the E-Verify system regularly for case updates.

4. The Employer agrees not to ask the employee to obtain a printout from the Social Security Number database (the Numident) or other written verification of the Social Security Number from the SSA.

B. REFERRAL TO DHS

1. If the Employer receives a tentative nonconfirmation issued by DHS, the Employer must print the tentative nonconfirmation notice as directed by the automated system and provide it to the employee so that the employee may determine whether he or she will contest the tentative nonconfirmation.

2. If the Employer finds a photo non-match for an employee who provides a document for which the automated system has transmitted a photo, the employer must print the photo non-match tentative nonconfirmation notice as directed by the automated system and provide it to the employee so that the employee may determine whether he or she will contest the finding.

3 The Employer agrees to refer individuals to DHS only when the employee chooses to contest a tentative nonconfirmation received from DHS automated verification process or when the Employer issues a tentative nonconfirmation based upon a photo non-match. The Employer will determine whether the employee contests the tentative nonconfirmation as soon as possible after the Employer receives it.

4. If the employee contests a tentative nonconfirmation issued by DHS, the Employer will provide the employee with a referral letter and instruct the employee to contact DHS through its toll-free hotline (as found on the referral letter) within 8 Federal Government work days.

5. If the employee contests a tentative nonconfirmation based upon a photo non-match, the Employer will provide the employee with a referral letter to DHS. DHS will electronically transmit

Company ID Number: _____

the result of the referral to the Employer within 10 Federal Government work days of the referral unless it determines that more than 10 days is necessary. The Employer agrees to check the E-Verify system regularly for case updates.

6. The Employer agrees that if an employee contests a tentative nonconfirmation based upon a photo non-match, the Employer will send a copy of the employee's Form I-551 or Form I-766 to DHS for review by:

- Scanning and uploading the document, or
- Sending a photocopy of the document by an express mail account (furnished and paid for by DHS).

7. The Employer understands that if it cannot determine whether there is a photo match/non-match, the Employer is required to forward the employee's documentation to DHS by scanning and uploading, or by sending the document as described in the preceding paragraph, and resolving the case as specified by the Immigration Services Verifier at DHS who will determine the photo match or non-match

ARTICLE IV

SERVICE PROVISIONS

SSA and DHS will not charge the Employer for verification services performed under this MOU. The Employer is responsible for providing equipment needed to make inquiries. To access the E-Verify System, an Employer will need a personal computer with Internet access.

ARTICLE V

PARTIES

A. This MOU is effective upon the signature of all parties, and shall continue in effect for as long as the SSA and DHS conduct the E-Verify program unless modified in writing by the mutual consent of all parties, or terminated by any party upon 30 days prior written notice to the others. Any and all system enhancements to the E-Verify program by DHS or SSA, including but not limited to the E-Verify checking against additional data sources and instituting new verification procedures, will be covered under this MOU and will not cause the need for a supplemental MOU that outlines these changes. DHS agrees to train employers on all changes made to E-Verify through the use of mandatory refresher tutorials and updates to the E-Verify User Manual Even without changes to E-Verify, DHS reserves the right to require employers to take mandatory refresher tutorials. An Employer that is a Federal contractor may terminate this MOU when the Federal contract that requires its participation in E-Verify is terminated or completed. In such a circumstance, the Federal contractor must provide written notice to DHS. If an Employer that is a Federal contractor fails to provide such notice, that Employer will remain a participant in the E-Verify program, will remain bound by the terms of this MOU that apply to non-Federal contractor participants, and will be required to use the E-Verify procedures to verify the employment eligibility of all newly hired employees.

B. Notwithstanding Article V, part A of this MOU, DHS may terminate this MOU if deemed necessary because of the requirements of law or policy, or upon a determination by SSA or

Company ID Number: _____

DHS that there has been a breach of system integrity or security by the Employer, or a failure on the part of the Employer to comply with established procedures or legal requirements The Employer understands that if it is a Federal contractor, termination of this MOU by any party for any reason may negatively affect its performance of its contractual responsibilities.

C. Some or all SSA and DHS responsibilities under this MOU may be performed by contractor(s), and SSA and DHS may adjust verification responsibilities between each other as they may determine necessary. By separate agreement with DHS, SSA has agreed to perform its responsibilities as described in this MOU

D. Nothing in this MOU is intended, or should be construed, to create any right or benefit, substantive or procedural, enforceable at law by any third party against the United States, its agencies, officers, or employees, or against the Employer, its agents, officers, or employees.

E Each party shall be solely responsible for defending any claim or action against it arising out of or related to E-Verify or this MOU, whether civil or criminal, and for any liability wherefrom, including (but not limited to) any dispute between the Employer and any other person or entity regarding the applicability of Section 403(d) of IIRIRA to any action taken or allegedly taken by the Employer

F The Employer understands that the fact of its participation in E-Verify is not confidential information and may be disclosed as authorized or required by law and DHS or SSA policy, including but not limited to, Congressional oversight, E-Verify publicity and media inquiries, determinations of compliance with Federal contractual requirements, and responses to inquiries under the Freedom of Information Act (FOIA)

G The foregoing constitutes the full agreement on this subject between DHS and the Employer.

H The individuals whose signatures appear below represent that they are authorized to enter into this MOU on behalf of the Employer and DHS respectively.

To be accepted as a participant in E-Verify, you should only sign the Employer's Section of the signature page. If you have any questions, contact E-Verify at 888-464-4218.

Employer

Name (Please Type or Print)	Title
Signature	Date

Department of Homeland Security – Verification Division

Name (Please Type or Print)	Title
Signature	Date

Company ID Number: _____

Information Required for the E-Verify Program

Information relating to your Company:

Company Name: _____

Company Facility Address: _____

_____

_____

Company Alternate Address: _____

_____

_____

County or Parish: _____

Employer Identification Number: _____

North American Industry Classification Systems Code: _____

Parent Company: _____

Number of Employees: _____

Number of Sites Verified for: _____

Are you verifying for more than 1 site? If yes, please provide the number of sites verified for in each State:

State	Number of sites	Site(s)

Company ID Number: _____

Information relating to the Program Administrator(s) for your Company on policy questions or operational problems:

Name. _____

Telephone Number _____

Fax Number. _____

E-mail Address _____

Name: _____

Telephone Number. _____

Fax Number: _____

E-mail Address _____

U.S. Housing and Urban Development

Section 3

Clause Requirements

Section 3 Clause

A. The work to be performed under this contract is subject to the requirements of section 3 of the Housing and Urban Development Act of 1968, as amended, 12 U.S.C. 1701u (Section 3). The purpose of Section 3 is to ensure that employment and other economic opportunities generated by HUD assistance or HUD-assisted projects covered by Section 3, shall, to the greatest extent feasible, be directed to low- and very low-income persons, particularly persons who are recipients of HUD assistance for housing.

B. The parties to this contract agree to comply with HUD's regulations in 24 CFR part 135, which implement Section 3. As evidenced by their execution of this contract, the parties to this contract certify that they are under no contractual or other impediment that would prevent them from complying with the part 135 regulations.

C. The contractor agrees to send will post copies of the bid notice in conspicuous places at the work site where both employees and applicants for training and employment positions can see the notice.

D. The contractor agrees to include this Section 3 clause in every subcontract subject to compliance with regulations in 24 CFR part 135, and agrees to take appropriate action, as provided in an applicable provision of the subcontract or in this Section 3 clause, upon a finding that the subcontractor is in violation of the regulations in 24 CFR part 135. The contractor will not subcontract with any subcontractor where the contractor has notice or knowledge that the subcontractor has been found in violation of the regulations in 24 CFR part 135.

E. The contractor will certify that any vacant employment positions, including training positions, that are filled (1) after the contractor is selected but before the contract is executed, and (2) with persons other than those to whom the regulations of 24 CFR part 135 require employment opportunities to be directed, were not filled to circumvent the contractor's obligations under 24 CFR part 135.

F. Noncompliance with HUD's regulations in 24 CFR part 135 may result in sanctions, termination of this contract for default, and debarment or suspension from future HUD assisted contracts.

The Copeland "Anti-Kickback" Act

OVERVIEW

The Copeland "Anti-Kickback" Act generally prohibits federal contractors or subcontractors engaged in building construction or repair from inducing an employee to give up any part of the compensation to which he or she is entitled under his or her employment contract and requires such contractors and subcontractors to submit weekly statements of compliance.

COMPLIANCE ASSISTANCE MATERIALS

BASIC INFORMATION

- Employment Law Guide - "Kickbacks" in Federally Funded Construction (Copeland Act) - Describes the basic provisions of the Copeland "Anti-Kickback" Act.
- Copeland "Anti-Kickback" Act Compliance Assistance Web Page

RECORDKEEPING

Each covered contractor or subcontractor must provide a weekly statement of the wages paid to each of its employees engaged in covered work. The statement shall be executed by the contractor or subcontractor or by an authorized officer or employee of the contractor or subcontractor who supervises the payment of wages and shall be on the "Statement of Compliance" form on the back of WH-347 "Payroll (For Contractors Optional Use") or on any form with identical wording. Within seven days after the regular pay date for the pay period the statement shall be delivered to a representative of the federal or state agency in charge.

APPLICABLE LAWS AND REGULATIONS

- The Copeland "Anti-Kickback" Act, 40 USC §276c and 18 USC §874 - The "Anti-Kickback" section of the Act precludes a contractor or subcontractor from inducing an employee to give up any part of the compensation to which he or she is entitled under his or her contract of employment. The Act also require the contractor and subcontractor to submit a weekly statement of the wages paid to each employee performing on covered work during the preceding payroll period.
- 29 CFR Part 3 - Regulations implementing the requirements of the "anti-kickback" section of the Copeland Act.

RELATED TOPICS AND LINKS

- Employment Law Guide - Prevailing Wages in Construction Contracts - Describes the coverage and basic requirements of prevailing wages in construction contracts. **See also Compliance Assistance By Law - The Davis-Bacon and Related Acts (DBRA).**
- Employment Law Guide - Hours and Safety Standards in Construction Contracts - Describes the Contract Work Hours and Safety Standards Act (CWHSSA) which requires contractors and subcontractors with covered contracts to pay laborers and mechanics employed in the performance of the contracts one and one-half times their basic rate of pay for all hours worked over 40 in a workweek. **See also Compliance Assistance By Law - The Contract Work Hours and Safety Standards Act (CWHSSA).**

DOL CONTACTS*

Wage and Hour Division
200 Constitution Avenue, NW
Room S-3502
Washington, DC 20210
Contact WHD
Tel: 1-866-4USWAGE (1-866-487-9243)
TTY: 1-877-889-5627
Local Offices

For questions on other DOL laws,
please call DOL's Toll-Free Help Line at 1-866-4-USA-DOL (1-866-487-2365). Live assistance is available in English and Spanish, Monday through Friday from 8:00 a.m. to 8:00 p.m. Eastern Time. Additional service is available in more than 140 languages through a translation service.
Tel: 1-866-4-USA-DOL (1-866-487-2365)
TTY: 1-877-889-5627

Pursuant to the U.S. Department of Labor's Confidentiality Protocol for Compliance Assistance Inquiries, information provided by a telephone caller will be kept confidential within the bounds of the law. Compliance assistance inquiries will not trigger an inspection, audit, investigation, etc.

The Contract Work Hours and Safety Standards Act (CWHSSA)

- Overview
- Compliance Assistance Materials
  - Basic Information
  - Fact Sheets
- Recordkeeping
- Applicable Laws and Regulations
- Related Topics and Links
- DOL Contacts
- Return to By Law Menu

OVERVIEW

The Contract Work Hours and Safety Standards Act (CWHSSA) applies to federal service contracts and federal and federally assisted construction contracts over $100,000. It requires contractors and subcontractors on covered contracts to pay laborers and mechanics employed in the performance of the contracts one and one-half times their basic rate of pay for all hours worked over 40 in a workweek. This Act also prohibits unsanitary, hazardous, or dangerous working conditions on federal and federally financed and assisted contruction projects.

The Wage and Hour Division (WHD) within the U.S. Department of Labor (DOL) enforces the compensation requirements of this Act, while DOL's Occupational Safety and Health Administration (OSHA) enforces the safety and health requirements.

COMPLIANCE ASSISTANCE MATERIALS

BASIC INFORMATION

- Employment Law Guide: Hours and Safety Standards in Construction Contracts

FACT SHEETS

- Occupational Safety and Health Administration (OSHA) Compliance Assistance Fact Sheet (PDF)

RECORDKEEPING

Depending on the type of federal procurement contract involved, the recordkeeping requirements the Copeland Act or the McNamara-O'Hara Service Contract Act apply to contracts subject to the Contract Work Hours and Safety Standards Act (CWHSSA).

APPLICABLE LAWS AND REGULATIONS

- Title I - Contract Work Hours and Safety Standards Act

- 29 CFR Part 4 - Regulations describing the labor standards for federal service contracts.
- 29 CFR Part 6 - Regulations describing the Rules of Practice for administrative proceedings enforcing labor standards in federal and federally assisted construction contracts and federal service contracts.
- 29 CFR Part 8 - Regulations describing practice before the Administrative Review Board with regard to federal service contracts.
- 29 CFR Part 5 - Regulations regarding the labor standards provisions applicable to contracts covering federally financed and assisted construction, as well as the labor standards applicable to nonconstruction contracts subject to the Contract Work Hours and Safety Standards Act.
- The Occupational Safety and Health (OSH) Act of 1970 (PDF)
- 29 CFR Parts 70 to 240 - Regulations issued by the Occupational Safety and Health Administration (OSHA) that cover a broad array of subjects, including procedures for state agreements; standards applicable to specific industries, such as shipyards, marine terminals, and agriculture; recording and reporting occupational injuries and illness; safety standards; health standards; and criteria for assessment of penalties.

RELATED TOPICS AND LINKS

- Employment Law Guide - "Kickbacks" in Federally Funded Construction (Copeland Act) - Prohibits a contractor or subcontractor from in any way inducing an employee to give up any part of the compensation to which he or she is entitled under his or her contract and requires contractors and subcontractors on certain federally funded construction contracts to submit weekly statements of compliance. **See also Compliance Assistance By Law - The Copeland "Anti-Kickback" Act.**
- Davis-Bacon and Related Acts Compliance Assistance Web Page
- McNamara-O'Hara Service Contracts Act Compliance Assistance Web Page
- Wage Determinations OnLine - This Web site provides a single location for federal contracting officers and the public to use in obtaining appropriate Service Contract Act (SCA) and Davis-Bacon Act (DBA) wage determinations (WDs) for each official contract action.
- State Occupational Safety and Health Plans
- OSHA Industry-Specific Resources

DOL CONTACTS*

Wage and Hour Division
200 Constitution Avenue, NW
Room S-3502
Washington, DC 20210
Contact WHD
Tel: 1-866-4USWAGE (1-866-487-9243)
TTY: 1-877-889-5627
Local Offices

- **Occupational Safety and Health Administration (OSHA)**
  200 Constitution Avenue, NW
  Washington, DC 20210
- Contact OSHA
  Tel.: 1-800-321-OSHA (1-800-321-6742)
  TTY: 1-877-889-5627
- Local Offices
- **For questions on other DOL laws,**
  please call DOL's Toll-Free Help Line at 1-866-4-USA-DOL (1-866-487-2365). Live assistance is available in English and Spanish, Monday through Friday from 8:00 a.m. to 8:00 p.m Eastern Time. Additional service is available in more than 140 languages through a translation service. Tel: 1-866-4-USA-DOL (1-866-487-2365)
  TTY: 1-877-889-5627

Pursuant to the U.S. Department of Labor's Confidentiality Protocol for Compliance Assistance Inquiries, information provided by a telephone caller will be kept confidential within the bounds of the law. Compliance assistance inquiries will not trigger an inspection, audit, investigation, etc.

TABLE OF CONTENTS

DAVIS BACON REQUIREMENTS

NOTICE TO CONTRACTORS 1

INFORMATION FOR BIDDERS 2

1. ELIGIBILITY OF CONTRACTORS 2
2. PROPOSAL 2
3. BID SECURITY 2
4. WITHDRAWAL OF BID 3
5. LATE BIDS 3
6. AWARD OR REJECTION OF BIDS 3
7. BIDDERS INTERESTED IN MORE THAN ONE BID 3
8. CONTRACT AND BONDS 3
9. INSURANCE REQUIREMENTS 3
10. SUBCONTRACTORS' LISTING AND CERTIFICATION OF CONTRACT COMPLIANCE 4
11. INTERPRETATION OF PLANS AND DOCUMENTS 4
12. CHANGES TO PLANS AND DOCUMENTS 4
13. ADDENDUM 4
14. ASSIGNMENT OF CONTRACT 4
15. PLANS AND SPECIFICATIONS TO SUCCESSFUL BIDDER 5
16. TIME OF COMPLETION 5
17. CITY OF GLENDALE TRANSACTION PRIVILEGE TAX 5
18. PRE-BID CONFERENCE 5
19. ALTERNATES 5
20. APPROVAL OF SUBSTITUTIONS 5
21. USE OF "EQUALS" 5
22. EXAMINATION OF CONTRACT DOCUMENTS AND VISIT SITE 6
23. BIDDERS IN DEFAULT 6

PROPOSAL 7
BID BOND 10
SUBCONTRACTOR LISTING AND CERTIFICATION OF CONTRACT COMPLIANCE 11
CONSTRUCTION AGREEMENT 12
PERFORMANCE BOND 26
PAYMENT BOND 27
CERTIFICATE OF INSURANCE 28
CONTRACTOR'S AFFIDAVIT/LIEN WAIVER 30

SUPPLEMENTAL GENERAL CONDITIONS 31

1. GENERAL 31
2. DEFINITIONS 31
3. PROPOSAL QUANTITIES 31
4. WITHDRAWAL OF PROPOSALS 32
5. LOSSES AND DAMAGES 32
6. DUST PREVENTION 32
7. EXCESS MATERIAL 32

8. STOCKPILE OF MATERIALS 32
9. REFUSE COLLECTION ACCESS 32
10. CLEAN-UP 32
11. SHOP DRAWINGS 32
12. PROTECTION OF FINISHED OR PARTIALLY FINISHED WORK 33
13. STATUS OF EMPLOYEES 33
14. LAWS AND REGULATIONS 33
15. PERMITS 33
16. ELECTRIC POWER AND WATER 33
17. SURVEY CONTROL POINTS AND MONUMENTS 33
18. EXISTING UTILITIES 33
19. MAINTENANCE OF IRRIGATION FACILITIES 34
20. OVERHEAD UTILITY LINES AND POLES 34
21. SOUTHWEST GAS FACILITIES EXPOSED DURING CONSTRUCTION 34
22. UNDERGROUND UTILITIES' BEDDING 34
23. SEWER SERVICE LINES 34
24. RIGHTS-OF-WAY 34
25. SUBCONTRACTS 34
26. PRE-CONSTRUCTION CONFERENCE 35
27. OVERTIME 35
28. CONTRACTOR'S CONSTRUCTION SCHEDULE 35
29. CHARACTER OF WORKMEN 36
30. HINDRANCES AND DELAYS 36
31. LIQUIDATED DAMAGES 36
32. PAYMENTS TO CONTRACTOR 37
33. WARRANTY 37

SPECIAL PROVISIONS 38

1. SCOPE OF WORK 38
2. DEFINITIONS 38
3. SUSPENSION OF WORK 38
4. COMPLIANCE WITH MANUFACTURER'S INSTRUCTIONS 38
5. ENERGIZED AERIAL ELECTRICAL POWER LINES 38
6. RECORD DRAWINGS 38
7. ALLOWANCE FOR CONSTRUCTION CONTINGENCIES 38

TECHNICAL SPECIFICATIONS

DETAILED DRAWINGS

NOTICE TO CONTRACTORS

Sealed bids shall be either mailed to the City of Glendale Engineering Department, 5850 West Glendale Avenue, Glendale, Arizona, 85301, or hand-delivered to the Engineering Department office, third floor, 5850 West Glendale Avenue, Glendale, Arizona, for furnishing all plant, material, equipment and labor, and to complete construction of: **PROJECT NO. 131425 GLENDALE PUBLIC HOUSING - BATHROOM REMODEL - PHASE II.** Contract shall remodel bathrooms in various apartments in the Lamar Housing Complex, located at 6842 N. 61st Avenue, Glendale Arizona.

Bids must be received by the Engineering Department of the City of Glendale no later than 10:00A.M., JUNE 30, 2014. Any bid received after that time will not be considered and will be returned to the bidder. At that time, the bids will be publicly opened and read aloud in the Engineering Department Conference Room, 5850 West Glendale Avenue, Glendale, Arizona.

A pre-bid conference will be held on JUNE 24, 2014, at 9:00A.M., at the Lamar Housing Complex, 6842 N. 61st Avenue, Glendale Arizona. Bidders, contractors, and other interested parties are invited to attend this conference which will be conducted by the Owner and Engineer to answer any questions.

Plans, specifications and contract documents may be examined, and copies may be obtained at City of Glendale Engineering Department, 5850 West Glendale Avenue, Glendale, Arizona. A non-refundable charge of $15.00 shall be paid for each set of plans and specifications issued from this office.

Each bid shall be in accordance with the plans, specifications and contract documents, and shall be set forth and submitted on the BID DOCUMENTS included with the project specifications book. The BID DOCUMENTS may be removed from the project specifications book and submitted independently of such book. Each bid shall be accompanied by a proposal guarantee, in the form of a certified or cashier's check or bid bond for ten percent (10%) of the amount of bid, made payable to the order of the City of Glendale, Arizona, to insure that the successful bidder will enter into the contract if awarded to him and submit the required Certificate of Insurance, Payment Bond and Performance Bond. All proposal guarantees, except those of the three lowest qualified bidders, will be returned immediately following the opening and checking of proposals. The proposal guarantees of the three lowest qualified bidders will be returned immediately after the contract documents have been executed by the successful bidder. The proposal guarantee shall be declared forfeited as liquidated damages if the successful bidder refuses to enter into said contract or submit the Certificate of Insurance, Payment Bond and Performance Bond after being requested to do so by the City of Glendale, Arizona.

The City of Glendale reserves the right to reject any or all bids or waive any informality or irregularity in a bid. No bidder may withdraw his bid for a period of fifty (50) days after opening and reading of the bids.

The City of Glendale is an equal opportunity employer and minority business enterprises and women's business enterprises are encouraged to submit bids.

CITY OF GLENDALE, ARIZONA

Published: JUNE 12 & 19, 2014
The Glendale Star

INFORMATION FOR BIDDERS

1. ELIGIBILITY OF CONTRACTORS: When calling for bids for contracts for public work to be performed on behalf of the State or any political subdivision thereof, which will be paid for from public funds, no bid shall be considered for performance of a contract, including construction work which is not submitted by a bidder duly licensed as a contractor in this State. No bid shall be awarded to any contractor or entity not authorized to do business in the State of Arizona by the Arizona Corporation Commission, as required by statute.

2. PROPOSAL: Bids to receive consideration shall be made in accordance with the following instructions:

(a) Before submitting a bid, bidders shall carefully examine the plans and specifications and contract documents, visit the site of the work, fully inform themselves as to all existing conditions and limitations.

(b) Bids shall be submitted on the "PROPOSAL" forms provided and delivered to the City of Glendale Engineering Department on or before the day and hour set in the "NOTICE TO CONTRACTORS," as published. Bids shall be enclosed in a sealed envelope marked on the outside lower right-hand corner indicating:

1. The bidder's name and address.
2. The project number.
3. The title of the project.
4. The time and date the bids are to be received.

(c) It is the sole responsibility of the bidder to see that his bid is received in proper time. Any bids received after the scheduled closing time for receipt of bids will be returned to the bidder unopened.

(d) The signatures of all persons shall be in longhand. Any interlineations, alterations, or erasures must be initialed by the signer of the bid.

(e) Bids shall not contain any recapitulations of the work to be done. No oral, telegraphic, telephonic, or modified proposals will be considered.

3. BID SECURITY: Each proposal shall be accompanied by a proposal guarantee in the form of a certified or cashier's check or bid bond, with a properly executed Power of Attorney attached, in an amount equal at least to ten percent (10%) of the proposal payable without condition to the City. If a bid bond is submitted with the bid it shall be issued by a company licensed with the Arizona Department of Insurance and authorized to issue such bonds in this state. **NO BONDS ISSUED BY INDIVIDUAL SURETIES WILL BE ACCEPTED. The company issuing the bid bond shall have a rating of not less than A- in the BEST rating available at the time this project was let to bid**. The proposal guarantee shall guarantee that the bidder, if awarded the contract, will, within ten (10) working days after the award, execute such contract in accordance with the proposal and in manner and form required by the contract documents, and will furnish good and sufficient bond for the faithful performance of the same, a payment bond and a certificate of insurance. The bid securities of the three (3) lowest bidders will be retained until the contract is awarded, or other disposition made thereof. The bid securities of all bidders, except the three (3) lowest, will be returned promptly after the canvass of bids. In the event the Contractor fails, within ten (10)

working days after the award, to execute said Contract and deliver the Performance and Labor and Material Payment Bonds and the Certificate of Insurance, the Bid Security shall become the property of the City.

4. WITHDRAWAL OF BID: Any bidder may withdraw his bid, either personally, by telegram or by written request, at any time prior to the scheduled closing time for receipt of bids. No bid may be withdrawn by telephone. Any bid withdrawn will not be opened and will be returned to the bidder. After opening and reading of the bids, no bidder may withdraw his bid for a period of fifty (50) days from the date of opening and reading.

5. LATE BIDS: Bids received after the scheduled closing time for receipt of bids, as contained in the "Notice to Contractors," will not be considered and will be returned to the bidder.

6. AWARD OR REJECTION OF BIDS: The contract will be awarded to the lowest and best qualified responsive bidder complying with these instructions and with the "NOTICE TO CONTRACTORS." The City of Glendale, Arizona, however, reserves the right to accept or reject any or all bids or to waive any or all informalities or irregularities in the bid. Alternates may be accepted depending upon the availability of City funds. Accepted alternates will be considered in determining the lowest responsive and responsible bidder.

7. BIDDERS INTERESTED IN MORE THAN ONE BID: No person, firm or corporation shall be allowed to make, file, or be interested in more than one (1) bid for the same work unless alternate bids are called for in the specifications or any addenda. A person, firm, or corporation who has submitted a sub-proposal to a bidder, or who has quoted prices on materials to a bidder is not thereby disqualified from submitting a sub-proposal or quoting prices to other bidders.

8. CONTRACT AND BONDS: The form of contract, which the successful bidder as Contractor will be required to execute and the forms of bonds which he shall be required to furnish are included in the contract documents and should be carefully examined by the bidder. The successful bidder shall use the forms provided or such other forms as are acceptable by the City. The Contract and Performance and Labor and Material Payment Bonds will be executed in three (3) original counterparts. All bonds shall be issued by companies licensed with the Arizona Department of Insurance and authorized to issue such bonds in this state. **NO BONDS ISSUED BY INDIVIDUAL SURETIES WILL BE ACCEPTED. The company issuing any bond shall have a rating of not less than A- in the BEST rating available at the time this project was let to bid.**

9. INSURANCE REQUIREMENTS: Contractor, and each Sub-contractor performing work or providing materials related to this Agreement must procure and maintain the insurance coverages described (collectively, "Contractor's Policies"), until each Parties' obligations under this Agreement are completed. Contractor must at all times relevant hereto carry a commercial general liability policy with a combined single limit of at least $1,000,000 per occurrence and $2,000,000 annual aggregate. **Contracts in excess of $250,000 shall require $2,000,000 single occurrence/$5,000,000 annual aggregate.**

Sub-contractors must at all times relevant hereto carry a general commercial liability policy with a combined single limit of at least $1,000,000 per occurrence.

This commercial general liability insurance must include independent contractors' liability, contractual liability, broad form property coverage, products and completed operations, XCU hazards if requested by the City, and a separation of insurance provision.

These limits may be met through a combination of primary and excess liability coverage.

Auto. A business auto policy providing a liability limit of at least $1,000,000 per accident for Contractor and $1,000,000 per accident for Sub-contractors and covering owned, non-owned and hired automobiles.

Workers' Compensation and Employer's Liability. A workers' compensation and employer's liability policy providing at least the minimum benefits required by Arizona law.

Equipment Insurance. Contractor must secure, pay for, and maintain all-risk insurance as necessary to protect the City against loss of owned, non-owned, rented or leased capital equipment and tools, equipment and scaffolding, staging, towers and forms owned or rented by Contractor or its Sub-contractors.

10. SUBCONTRACTORS LISTING AND CERTIFICATION OF CONTRACT COMPLIANCE: The contractor will be required to furnish the form of subcontractors listing and certification of contract compliance with the executed contract documents. This information is requested for tracking and insurance purposes only.

11. INTERPRETATION OF PLANS AND DOCUMENTS: If any person contemplating a bid for proposed contract is in doubt as to the true meaning of any part of the plans, specifications, or other proposed contract documents, or finds discrepancies in or omissions from the plans and specifications, he may submit to the Engineering Department, a written request for an interpretation or correction thereof. The person submitting the request will be responsible for its prompt delivery. Questions received less than ninety-six (96) hours before the bid opening time may not be answered. Any interpretation or correction of the documents will be made only by Addendum, duly issued and a copy of such Addendum will be mailed or delivered to each person receiving a set of such documents. The City of Glendale will not be responsible for any other explanations or interpretations of the proposed documents.

12. CHANGES TO PLANS AND DOCUMENTS: Any changes to the plans and documents shall be made only by Addendum. No verbal or other changes to the plans and documents will be valid. A copy of each Addendum will be mailed or delivered as provided in Section 13 below.

13. ADDENDUM: Any addenda will be faxed, mailed or delivered to all who are known by the City to have received a complete set of bid documents, and to offices where bid documents have been filed for review purposes. It is the responsibility of each bidder to ascertain that he has received all addenda issued by telephoning the office identified in the NOTICE TO CONTRACTORS as the location where bid documents are available prior to submitting his bid.

Bidders shall acknowledge all addenda in the appropriate location on the "PROPOSAL" form. Failure to acknowledge receipt of Addenda shall render the bid proposal non-responsive and it will be rejected.

14. ASSIGNMENT OF CONTRACT: No assignment by the Contractor of any contract to be entered into hereunder, or any part thereof, or of funds to be received thereunder by the Contractor,

will be recognized by the Owner by the Owner unless such assignment has had prior approval of the Owner, and the Surety has been given due notice of such assignment in writing and has consented thereto in writing.

15. PLANS AND SPECIFICATIONS TO SUCCESSFUL BIDDER: The successful bidder may obtain five (5) sets of plans and specifications for this project from the City.

16. TIME OF COMPLETION: The Contractor shall commence work under this project on or before the tenth day following receipt of the Notice to Proceed for that project from the City of Glendale and shall fully complete all work under the project within ONE HUNDRED TWENTY-TWO (122) consecutive calendar days from and including the date of receipt of such Notice to Proceed. Time is of the essence in the completion of all work required under this contract. The Contractor shall, at all times, during the continuance of the contract, prosecute the work with such force and equipment as is sufficient to complete all work within the time specified.

17. CITY OF GLENDALE TRANSACTION PRIVILEGE TAX: The City of Glendale transaction privilege tax shall **NOT** be waived under the provisions of this contract. The current privilege tax rate can be obtained from the City of Glendale Sales Tax and Licenses Department. The Contractor shall be responsible for reporting and payment of all city, county, state or federal taxes.

18. PRE-BID CONFERENCE: A pre-bid conference will be held on JUNE 24, 2014, at 9:00A.M., in the Engineering Department Conference Room, 5850 West Glendale Avenue, Glendale, Arizona. Bidders, contractors, and other interested parties are invited to attend this conference which will be conducted by the Owner and Engineer to answer any questions.

19. ALTERNATES: Alternate proposals will not be considered unless called for in the documents or any addenda thereto. When alternates are requested, all requested alternates or alternate bid items, unless otherwise stated, shall be bid. If no change in the base bid will occur with the alternate, enter "No Change."

20. APPROVAL OF SUBSTITUTIONS: The materials, products and equipment described in the Documents and Addenda establish a standard or required function, dimension, appearance and quality to be met by any proposed substitution. No substitute will be considered, before bid opening, unless written request for approval has been received by the City Engineer at least ten (10) working days prior to the scheduled closing time for receipt of bids. Each such request shall include the name of the material or equipment for which it is to be substituted and a complete description of the proposed substitute including any drawings, cuts, performance and test data and any other information necessary for evaluation of the substitute. Bidder shall not be entitled to approval of a substitute.

If a substitute is approved, the approval shall be set forth in an Addendum. Bidders shall not rely upon approvals made in any other manner.

21. USE OF "EQUALS": When the specifications for materials, articles, products and equipment state "or equal," contractor may bid upon, and use materials, articles, products and equipment which will perform equally the duties imposed by the general design. The City Engineering Department will have the final approval of all materials, articles, products and equipment proposed to be used as an "equal." It shall not be purchased or installed without the prior written approval from the City Engineering Department.

Approvals for "equals," before bid opening, may be requested in writing to the City Engineering Department for approval. Requests must be received at least ten (10) days prior to the date set for opening the Bid Proposals. The request shall state the name of the material, article, product or equipment for which the item is sought to be considered an equal and a complete description of the proposed equal including any drawings, cuts, performance and test data and any other information necessary for approval of the equal. All approvals will be issued in the form of an addendum.

22. EXAMINATION OF CONTRACT DOCUMENTS AND VISIT SITE: Before submitting a Bid Proposal, bidders should carefully examine the Contract Documents, visit the site of the work, fully inform themselves as to all existing conditions and limitations. No consideration will be granted for any alleged misunderstanding of the material, articles or piece of equipment to be furnished or work to be done. It is understood that the tender of the Bid Proposal carries with it the agreement to all items and conditions referred to herein or indicated in the Contract Documents.

23. BIDDERS IN DEFAULT: No bid will be awarded to any person, firm or corporation that is not authorized by the Arizona Corporation Commission to do business in the State of Arizona, in arrears or is in default to the City of Glendale upon any debt or contract, or that is a defaulter as surety or otherwise upon any obligation to the City of Glendale, or has failed to faithfully perform any previous contract with the City of Glendale.

END OF INFORMATION FOR BIDDERS

PROPOSAL

Place _____

Date 7/3/14

Proposal of McHenna Contracting, a corporation organized and existing under the laws of the State of Arizona. a partnership consisting of _____; or an individual trading as _____.

TO THE HONORABLE MAYOR AND COUNCIL
CITY OF GLENDALE
GLENDALE, ARIZONA

Gentlemen:

The undersigned hereby proposes and agrees to furnish any and all required labor, materials, construction equipment, transportation and services for the construction of: **PROJECT 131425 - GLENDALE PUBLIC HOUSING - BATHROOM REMODEL - PHASE II**, in strict conformity with the plans and specifications for the following unit prices:

(Extension of these unit prices on the basis of estimated quantities and the totaling of these extensions are for the purpose of comparing bids only. The mathematics of such extensions and totaling will be checked and corrected by the Engineering Department, before evaluating the bids, and the lowest of such corrected and checked totals will determine the lowest bids.)

BID SCHEDULE					
PROJECT NO. 131425					
GLENDALE PUBLIC HOUSING-					
BATHROOM REMODEL - PHASE II					
BASE BID					
Item No.	**Description**	**Quantity**	**Unit**	**Unit Cost**	**Total Cost**
1	Allowance For Construction Contingency	1	LS	$1,000.00	$1,000.00
2	Bathroom Remodel, Complete per Plans and Specifications	4	EA	$4900	19,600
				TOTAL BASE BID:	$20,600

The undersigned hereby declares that he has visited the site(s) and has carefully examined the contract documents relating to the work covered by the above bid or bids.

Upon receipt of notice of the acceptance of this bid, we will execute the formal contract attached within ten (10) days, and will deliver a one hundred percent (100%) Performance Bond for the faithful performance of this Contract, together with a one hundred percent (100%) Payment Bond and Certificate of Insurance.

The bid security attached, with endorsement, in the sum of ten percent (10%) of the total bid, is to become the property of the City of Glendale, Arizona, in the event the Contract and Bonds are not executed within the time set forth, as liquidated damages for the delay and additional work caused thereby.

The undersigned has checked carefully all the above figures and understands that the City of Glendale, Arizona, will not be responsible for any errors or omissions on the part of the undersigned in making up this bid.

The undersigned understands that the Mayor and Council of the City of Glendale, Arizona, reserves the right to reject any or all bids or to waive any informalities or irregularities in the bid.

Respectfully submitted,

Arizona Contractor's Classification and License No.

277335 KB-2

McKenna Contracting
Contractor

By David McKenna

5154 W. Windrose Dr
Glendale, Az 85304
(Complete business address)

Telephone Number: 602-478-5773
Fax Number _____

Bidder shall signify receipt of all Addenda here (if any):

#1 / #2

Failure to acknowledge receipt of all Addenda shall render the bid proposal non-responsive and will be rejected.

Acknowledged by _____

STATUTORY BID BOND
PURSUANT TO TITLE 34, CHAPTER 2, ARTICLE 1
OF THE ARIZONA REVISED STATUTES
(Penalty of this bond must not be less than 10% of the bid amount)

KNOW ALL MEN BY THESE PRESENTS:

That we, _____(hereinafter "Principal") as Principal, and _____, (hereinafter called the Surety) a corporation organized and existing under the laws of the State of _____, with its principal offices in the City of _____, as Surety, are held and firmly bound unto the City of Glendale (hereinafter "Obligee") in the amount of_____ Dollars ($_____) for the payment whereof, the said Principal and Surety bind themselves, and their heirs, administrators, successors and assigns, jointly and severally, firmly by these presents.

WHEREAS, the said Principal has submitted a bid for: **PROJECT 131425 - GLENDALE PUBLIC HOUSING - BATHROOM REMODEL - PHASE II**

NOW, THEREFORE, if the Obligee shall accept the proposal of the Principal and the Principal shall enter into a contract with the Obligee in accordance with the terms of the proposal and give the Bonds and Certificates of Insurance as specified in the Standard Specifications with good and sufficient Surety for the faithful performance of the Contract and for the prompt payment of labor and material furnished in the prosecution of the contract, or in the event of the failure of the Principal to enter into such contract and give the Bonds and Certificates of Insurance, if the Principal pays to the Obligee the difference not to exceed the penalty of the bond between the amount specified in the Proposal and such larger amount for which the Obligee may in good faith contract with another party to perform the work covered by the Proposal, then this obligation is void. Otherwise, it remains in full force and effect provided, however, that this bond is executed pursuant to the provisions of Section 34-201, Arizona Revised Statutes, and all liabilities on this bond shall be determined in accordance with the provisions of the section to the extent as if it were copied at length herein.

Witness our hands this ____ day of _____, 20__.

_____
PRINCIPAL

By: _____

_____
SURETY SEAL

_____
AGENCY OF RECORD

CITY OF GLENDALE

Subcontractor Listing and Certification of Contract Compliance

PROJECT 131425 - GLENDALE PUBLIC HOUSING - BATHROOM REMODEL - PHASE II

The undersigned contractor hereby submits the following list of firms to be employed as subcontractors on the above referenced project

SUBCONTRACTOR	WORK ELEMENTS	CONTRACT VALUE	DBE(Y/N)*	AGENCY**

The undersigned hereby certifies that all subcontracts shall be in writing and shall provide that all work to be performed shall be in accordance with the terms of the Contract All subcontracts shall be subject to approval by the City Certified copies of all subcontracts shall be furnished to the Engineer, however, prices may be omitted. Subcontracts shall conform to the regulations governing employment of labor.

_____
Name of Firm

DBE?(Y/N)*·_____ Agency**: _____

_____
Signature

_____
Title

*Firms certified as Disadvantaged Business Enterprises **Indicate certifying agency, e g , ADOT, MCHD, COP, etc. **This information is requested for tracking purposes only.** The City of Glendale is an equal opportunity employer and minority business enterprises and women's business enterprises are encouraged to submit bids

Project 131425

CONSTRUCTION AGREEMENT

This Construction Agreement ("Agreement") is entered into and effective between the CITY OF GLENDALE, an Arizona municipal corporation ("City"), and McKenna Contracting, LLC, an Arizona limited liability company, ("Contractor") as of the 2 day of September, 2014

RECITALS

A. City intends to undertake a project for the benefit of the public and with public funds that is more fully set forth in the **Notice to Contractors** and the attached **Exhibit A** ("Project"),

B. City desires to retain the services of Contractor to perform those specific duties and produce the specific work as set forth in the Project, the plans and specifications, the **Information for Bidders,** and the **Maricopa Association of Governments** ("MAG") **General and Supplemental Conditions and Provisions**;

C City and Contractor desire to memorialize their agreement with this document.

AGREEMENT

In consideration of the Recitals, which are confirmed as true and correct and incorporated by this reference, the mutual promises and covenants contained in this Agreement, and other good and valuable consideration, City and Contractor agree as follows:

1. Project.

1.1 Scope. Contractor will provide all services and material necessary to assure the Project is completed timely and efficiently consistent with Project requirements, including, but not limited to, working in close interaction and interfacing with City and its designated employees, and working closely with others, including other contractors, providers or consultants retained by City.

1.2 Documents. The following documents are, by this reference, entirely incorporated into this Agreement and attached Exhibits as though fully set forth herein:

(A) Notice to Contractors;
(B) Information for Bidders;
(C) MAG General Conditions, Supplemental General Conditions, Special and Technical Provisions;
(D) Proposal;
(E) Bid Bond;
(F) Payment Bond;
(G) Performance Bond,
(H) Certificate of Insurance;
(I) Appendix; and
(J) Plans and Addenda thereto.

Should a conflict exist between this Agreement (and its attachments), and any of the incorporated documents as listed above, the provisions of this Agreement shall govern.

1.3 Project Team.

(A) Project Manager. Contractor will designate an employee as Project Manager with sufficient training, knowledge, and experience to, in the City's opinion, to complete the project and handle all aspects of the Project such that the work produced by Contractor is consistent with applicable standards as detailed in this Agreement

(B) Project Team.

(1) The Project manager and all other employees assigned to the project by Contractor will comprise the "Project Team."

(2) Project Manager will have responsibility for and will supervise all other employees assigned to the project by Contractor.

(C) Sub-contractors.

(1) Contractor may engage specific technical contractor (each a "Sub-contractor") to furnish certain service functions.

(2) Contractor will remain fully responsible for Sub-contractor's services.

(3) Sub-contractors must be approved by the City, unless the Sub-contractor was previously mentioned in the response to the solicitation

(4) Contractor shall certify by letter that contracts with Sub-contractors have been executed incorporating requirements and standards as set forth in this Agreement.

2. **Schedule and Term.** The Project will be undertaken in a manner that ensures it is completed in a timely and efficient manner As provided in in **Exhibit A**, the Project shall be completed by no later than within one hundred twenty-two (122) consecutive calendar days from the effective date of this agreement. This agreement shall terminate on the one-year anniversary of its effective date and shall not be extended or renewed, unless such term is amended in a written agreement signed by both parties.

3. **Contractor's Work.**

3.1 **Standard.** Contractor must perform services in accordance with the standards of due diligence, care, and quality prevailing among contractors having substantial experience with the successful furnishing of services and materials for projects that are equivalent in size, scope, quality, and other criteria under the Project and identified in this Agreement.

3.2 **Licensing.** Contractor warrants that

(A) Contractor and Sub-contractors will hold all appropriate and required licenses, registrations and other approvals necessary for the lawful furnishing of services ("Approvals"); and

(B) Neither Contractor nor any Sub-contractor has been debarred or otherwise legally excluded from contracting with any federal, state, or local governmental entity ("Debarment").

(1) City is under no obligation to ascertain or confirm the existence or issuance of any Approvals or Debarments or to examine Contractor's contracting ability.

(2) Contractor must notify City immediately if any Approvals or Debarment changes during the Agreement's duration and the failure of the Contractor to notify City as required will constitute a material default of this Agreement.

3.3 **Compliance.** Services and materials will be furnished in compliance with applicable federal, state, county and local statutes, rules, regulations, ordinances, building codes, life safety codes, or other standards and criteria designated by City.

3.4 **Coordination; Interaction.**

(A) If the City determines that the Project requires the coordination of professional services or other providers, Contractor will work in close consultation with City to proactively interact with any other contractors retained by City on the Project ("Coordinating Entities").

(B) Subject to any limitations expressly stated in the budget, Contractor will meet to review the Project, schedules, budget, and in-progress work with Coordinating Entities and the City as often and for durations as City reasonably considers necessary in order to ensure the timely work delivery and Project completion.

(C) If the Project does not involve Coordinating Entities, Contractor will proactively interact with any other contractors when directed by City to obtain or disseminate timely information for the proper execution of the Project.

3.5 **Hazardous Substances.** Contractor is responsible for the appropriate handling, disposal of, and if necessary, any remediation and all losses and damages to the City, associated with the use or release of hazardous substances by Contractor in connection with completion of the Project.

3.6 **Warranties.** At any time within two years after completion of the Project, Contractor must, at Contractor's sole expense and within 20 days of written notice from the City, uncover, correct and remedy all defects in Contractor's work City will accept a manufacturer's warranty on approved equipment as satisfaction of the Contractor's warranty under this subsection.

3.7. **Bonds.** Upon execution of this Agreement, and if applicable, Contractor must furnish Payment and Performance bonds as required under A.R.S. § 34-608.

4. **Compensation for the Project.**

4.1 **Compensation.** Contractor's compensation for the Project, including those furnished by its Sub-contractors will not exceed $20,600, as specifically detailed in the Contractor's bid and set forth in **Exhibit B** ("Compensation").

4.2 **Change in Scope of Project.** The Compensation may be equitably adjusted if the originally contemplated scope of services as outlined in the Project is significantly modified by the City.

(A) Adjustments to the Scope or Compensation require a written amendment to this Agreement and may require City Council approval.

(B) Additional services which are outside the scope of the Project and not contained in this Agreement may not be performed by the Contractor without prior written authorization from the City.

5. **Billings and Payment.**

5.1 **Applications.**

(A) The Contractor will submit monthly invoices (each, a "Payment Application") to City's Project Manager and City will remit payments based upon the Payment Application as stated below.

(B) The period covered by each Payment Application will be one calendar month ending on the last day of the month.

5.2 **Payment.**

(A) After a full and complete Payment Application is received, City will process and remit payment within 30 days.

(B) Payment may be subject to or conditioned upon City's receipt of:

(1) Completed work generated by Contractor and its Sub-contractors, and

(2) Unconditional waivers and releases on final payment from Sub-contractors as City may reasonably request to assure the Project will be free of claims arising from required performances under this Agreement.

5.3 **Review and Withholding.** City's Project Manager will timely review and certify Payment Applications

(A) If the Payment Application is rejected, the Project Manager will issue a written listing of the items not approved for payment.

(B) City may withhold an amount sufficient to pay expenses that City reasonably expects to incur in correcting the deficiency or deficiencies rejected for payment.

(C) Contractor will provide, by separate cover, and concurrent with the execution of this Agreement, all required financial information to the City, including City of Glendale Transaction Privilege License and Federal Taxpayer identification numbers.

(D) City will temporarily withhold Compensation amounts as required by A R.S. 34-221(C).

6. Termination.

6.1 For Convenience. City may terminate this Agreement for convenience, without cause, by delivering a written termination notice stating the effective termination date, which may not be less than 15 days following the date of delivery.

(A) Contractor will be equitably compensated any services and materials furnished prior to receipt of the termination notice and for reasonable costs incurred

(B) Contractor will also be similarly compensated for any approved effort expended and approved costs incurred that are directly associated with Project closeout and delivery of the required items to the City

6.2 For Cause. City may terminate this Agreement for cause if Contractor fails to cure any breach of this Agreement within seven days after receipt of written notice specifying the breach

(A) Contractor will not be entitled to further payment until after City has determined its damages. If City's damages resulting from the breach, as determined by City, are less than the equitable amount due but not paid Contractor for Service and Repair furnished, City will pay the amount due to Contractor, less City's damages.

(B) If City's direct damages exceed amounts otherwise due to Contractor, Contractor must pay the difference to City immediately upon demand; however, Contractor will not be subject to consequential damages more than $1,000,000 or the amount of this Agreement, whichever is greater.

7. Insurance.

7.1 Requirements. Contractor must obtain and maintain the following insurance ("Required Insurance")

(A) Contractor and Sub-contractors. Contractor, and each Sub-contractor performing work or providing materials related to this Agreement must procure and maintain the insurance coverages described below (collectively, "Contractor's Policies"), until each Parties' obligations under this Agreement are completed

(B) General Liability.

(1) Contractor must at all times relevant hereto carry a commercial general liability policy with a combined single limit of at least $1,000,000 per occurrence and $2,000,000 annual aggregate.

(2) Sub-contactors must at all times relevant hereto carry a general commercial liability policy with a combined single limit of at least $1,000,000 per occurrence.

(3) This commercial general liability insurance must include independent contractors' liability, contractual liability, broad form property coverage, products and completed operations, XCU hazards if requested by the City, and a separation of insurance provision.

(4) These limits may be met through a combination of primary and excess liability coverage.

(C) Auto. A business auto policy providing a liability limit of at least $1,000,000 per accident for Contractor and 1,000,000 per accident for Sub-contractors and covering owned, non-owned and hired automobiles.

(D) Workers' Compensation and Employer's Liability. A workers' compensation and employer's liability policy providing at least the minimum benefits required by Arizona law.

(E) Equipment Insurance. Contractor must secure, pay for, and maintain all-risk insurance as necessary to protect the City against loss of owned, non-owned, rented or leased capital equipment and tools, equipment and scaffolding, staging, towers and forms owned or rented by Contractor or its Sub-contractors

(F) Notice of Changes. Contractor's Policies must provide for not less than 30 days' advance written notice to City Representative of.

(1) Cancellation or termination of Contractor or Sub-contractor's Policies;

(2) Reduction of the coverage limits of any of Contractor or and Sub-contractor's Policies, and

(3) Any other material modification of Contractor or Sub-contractor's Policies related to this Agreement.

(G) Certificates of Insurance.

(1) Within 10 business days after the execution of the Agreement, Contractor must deliver to City Representative certificates of insurance for each of Contractor and Sub-contractor's Policies, which will confirm the existence or issuance of Contractor and Sub-contractor's Policies in accordance with the provisions of this section, and copies of the endorsements of Contractor and Sub-contractor's Policies in accordance with the provisions of this section

(2) City is and will be under no obligation either to ascertain or confirm the existence or issuance of Contractor and Sub-contractor's Policies, or to examine Contractor and Sub-contractor's Policies, or to inform Contractor or Sub-contractor in the event that any coverage does not comply with the requirements of this section

(3) Contractor's failure to secure and maintain Contractor Policies and to assure Sub-contractor policies as required will constitute a material default under this Agreement.

(H) Other Contractors or Vendors.

(1) Other contractors or vendors that may be contracted by Contractor with in connection with the Project must procure and maintain insurance coverage as is appropriate to their particular agreement.

(2) This insurance coverage must comply with the requirements set forth above for Contractor's Policies (e g , the requirements pertaining to endorsements to name the parties as additional insured parties and certificates of insurance).

(I) Policies. Except with respect to workers' compensation and employer's liability coverages, the City must be named and properly endorsed as additional insureds on all liability policies required by this section

(1) The coverage extended to additional insureds must be primary and must not contribute with any insurance or self insurance policies or programs maintained by the additional insureds.

(2) All insurance policies obtained pursuant to this section must be with companies legally authorized to do business in the State of Arizona and acceptable to all parties.

7.2 Sub-contractors.

(A) Contractor must also cause its Sub-contractors to obtain and maintain the Required Insurance.

(B) City may consider waiving these insurance requirements for a specific Sub-contractor if City is satisfied the amounts required are not commercially available to the Sub-contractor and the insurance the Sub-contractor does have is appropriate for the Sub-contractor's work under this Agreement.

(C) Contractor and Sub-contractors must provide to the City proof of Required Insurance whenever requested.

7.3 Indemnification.

(A) To the fullest extent permitted by law, Contractor must defend, indemnify, and hold harmless City and its elected officials, officers, employees and agents (each, an "Indemnified Party," collectively, the

"Indemnified Parties"), for, from, and against any and all claims, demands, actions, damages, judgments, settlements, personal injury (including sickness, disease, death, and bodily harm), property damage (including loss of use), infringement, governmental action and all other losses and expenses, including attorneys' fees and litigation expenses (each, a "Demand or Expense"; collectively, "Demands or Expenses") asserted by a third-party (i e a person or entity other than City or Contractor) and that arises out of or results from the breach of this Agreement by the Contractor or the Contractor's negligent actions, errors or omissions (including any Sub-contractor or other person or firm employed by Contractor), whether sustained before or after completion of the Project.

(B) This indemnity and hold harmless policy applies even if a Demand or Expense is in part due to the Indemnified Party's negligence or breach of a responsibility under this Agreement, but in that event, Contractor shall be liable only to the extent the Demand or Expense results from the negligence or breach of a responsibility of Contractor or of any person or entity for whom Contractor is responsible.

(C) Contractor is not required to indemnify any Indemnified Parties for, from, or against any Demand or Expense resulting from the Indemnified Party's sole negligence or other fault solely attributable to the Indemnified Party.

7.4 **Waiver of Subrogation.** Contractor waives, and will require any Subcontractor to waive, all rights of subrogation against the City to the extent of all losses or damages covered by any policy of insurance

8. **Immigration Law Compliance.**

8 1 Contractor, and on behalf any subcontractor, warrants, to the extent applicable under A.R S. § 41-4401, compliance with all federal immigration laws and regulations that relate to their employees as well as compliance with A.R.S. § 23-214(A) which requires registration and participation with the E-Verify Program

8 2 Any breach of warranty under subsection 8.1 above is considered a material breach of this Agreement and is subject to penalties up to and including termination of this Agreement.

8.3 City retains the legal right to inspect the papers of any Contractor or subcontractor employee who performs work under this Agreement to ensure that the Contractor or any subcontractor is compliant with the warranty under subsection 8.1 above.

8 4 City may conduct random inspections, and upon request of City, Contractor shall provide copies of papers and records of Contractor demonstrating continued compliance with the warranty under subsection 8 1 above. Contractor agrees to keep papers and records available for inspection by the City during normal business hours and will cooperate with City in exercise of its statutory duties and not deny access to its business premises or applicable papers or records for the purposes of enforcement of this section 8.

8 5 Contractor agrees to incorporate into any subcontracts under this Agreement the same obligations imposed upon Contractor and expressly accrue those obligations directly to the benefit of the City. Contractor also agrees to require any subcontractor to incorporate into each of its own subcontracts under this Agreement the same obligations above and expressly accrue those obligations to the benefit of the City

8.6 Contractor's warranty and obligations under this section to the City is continuing throughout the term of this Agreement or until such time as the City determines, in its sole discretion, that Arizona law has been modified in that compliance with this section is no longer a requirement.

8 7 The "E-Verify Program" above means the employment verification program administered by the United States Department of Homeland Security, the Social Security Administration, or any successor program

9. **Conflict.** Contractor acknowledges this Agreement is subject to A R S § 38-511, which allows for cancellation of this Agreement in the event any person who is significantly involved in initiating, negotiating, securing, drafting, or creating the Agreement on City's behalf is also an employee, agent, or consultant of any other party to this Agreement.

10. **Non-Discrimination Policies.** Contractor must not discriminate against any employee or applicant for employment on the basis of race, religion, color sex or national origin Contractor must develop, implement and maintain non-discrimination policies and post the policies in conspicuous places visible to employees and applicants for employment. Contractor will require any Sub-contractor to be bound to the same requirements as stated within this section

11. Notices.

11.1 A notice, request or other communication that is required or permitted under this Agreement (each a "Notice") will be effective only if.

(A) The Notice is in writing, and

(B) Delivered in person or by private express overnight delivery service (delivery charges prepaid), certified or registered mail (return receipt requested).

(C) Notice will be deemed to have been delivered to the person to whom it is addressed as of the date of receipt, if:

(1) Received on a business day, or before 5 00 p m., at the address for Notices identified for the Party in this Agreement by U.S Mail, hand delivery, or overnight courier on or before 5.00 p m.; or

(2) As of the next business day after receipt, if received after 5 00 p.m.

(D) The burden of proof of the place and time of delivery is upon the Party giving the Notice.

(E) Digitalized signatures and copies of signatures will have the same effect as original signatures

11.2 **Representatives.**

(A) Contractor. Contractor's representative ("Contractor's Representative") authorized to act on Contractor's behalf with respect to the Project, and his or her address for Notice delivery is.

McKenna Contracting, LLC
Attn· David McKenna
5154 West Windrose Drive
Glendale, Arizona 85304

(B) City. City's representative ("City's Representative") authorized to act on City's behalf, and his or her address for Notice delivery is.

City of Glendale
Attn. Mike Johnson
5850 West Glendale Avenue
Glendale, Arizona 85301

With required copies to:

City of Glendale
City Manager
5850 West Glendale Avenue
Glendale, Arizona 85301

City of Glendale
City Attorney
5850 West Glendale Avenue
Glendale, Arizona 85301

(C) Concurrent Notices.

(1) All notices to City's representative must be given concurrently to City Manager and City Attorney.

(2) A notice will not be considered to have been received by City's representative until the time that it has also been received by City Manager and City Attorney.

(3) City may appoint one or more designees for the purpose of receiving notice by delivery of a written notice to Contractor identifying the designee(s) and their respective addresses for notices.

(D) **Changes.** Contractor or City may change its representative or information on Notice, by giving Notice of the change in accordance with this section at least ten days prior to the change.

12. **Financing Assignment.** City may assign this Agreement to any City-affiliated entity, including a non-profit corporation or other entity whose primary purpose is to own or manage the Project

13. **Entire Agreement; Survival; Counterparts; Signatures.**

13.1 **Integration.** This Agreement contains, except as stated below, the entire agreement between City and Contractor and supersedes all prior conversations and negotiations between the parties regarding the Project or this Agreement.

(A) Neither Party has made any representations, warranties or agreements as to any matters concerning the Agreement's subject matter.

(B) Representations, statements, conditions, or warranties not contained in this Agreement will not be binding on the parties.

(C) Any solicitation, addendums and responses submitted by the Contractor are incorporated fully into this Agreement as Exhibit A. Any inconsistency between Exhibit A and this Agreement will be resolved by the terms and conditions stated in this Agreement

13.2 **Interpretation.**

(A) The parties fairly negotiated the Agreement's provisions to the extent they believed necessary and with the legal representation they deemed appropriate

(B) The parties are of equal bargaining position and this Agreement must be construed equally between the parties without consideration of which of the parties may have drafted this Agreement.

(C) The Agreement will be interpreted in accordance with the laws of the State of Arizona.

13.3 **Survival.** Except as specifically provided otherwise in this Agreement each warranty, representation, indemnification and hold harmless provision, insurance requirement, and every other right, remedy and responsibility of a Party, will survive completion of the Project, or the earlier termination of this Agreement.

13.4 **Amendment.** No amendment to this Agreement will be binding unless in writing and executed by the parties. Any amendment may be subject to City Council approval.

13.5 **Remedies.** All rights and remedies provided in this Agreement are cumulative and the exercise of any one or more right or remedy will not affect any other rights or remedies under this Agreement or applicable law.

13.6 **Severability.** If any provision of this Agreement is voided or found unenforceable, that determination will not affect the validity of the other provisions, and the voided or unenforceable provision will be reformed to conform to applicable law.

13.7 **Counterparts.** This Agreement may be executed in counterparts, and all counterparts will together comprise one instrument.

14. **Dispute Resolution.** Each claim, controversy and dispute ("Dispute") between Contractor and City will be resolved in accordance with Exhibit C The final determination will be made by the City.

15. **Exhibits.** The following exhibits, with reference to the term in which they are first referenced, are incorporated by this reference.

Exhibit A	Project
Exhibit B	Compensation
Exhibit C	Dispute Resolution

Project 131425

The parties enter into this Agreement as of the date shown above.

City of Glendale,
an Arizona municipal corporation

David D. Beard

By. David Beard
Its· City Engineer

ATTEST:

City Clerk (SEAL)

APPROVED AS TO FORM·

City Attorney

McKenna Contracting, LLC
an Arizona limited liability company

By· David McKenna
Its· Manager

WOMEN-OWNED/MINORITY BUSINESS [ ] YES [✓] NO [redacted]
CITY OF GLENDALE TRANSACTION PRIVILEGE TAX NO. [redacted]
FEDERAL TAXPAYER IDENTIFICATION NO. [redacted]

Project 131425

EXHIBIT A
CONSTRUCTION AGREEMENT

PROJECT

Contract shall remodel bathrooms in various apartments in the Lamar Housing Complex, located at 6842 N 61st Avenue, Glendale Arizona.

Project 131425

EXHIBIT B
CONSTRUCTION AGREEMENT

COMPENSATION

METHOD AND AMOUNT OF COMPENSATION

By bid, including all services, materials and costs

NOT-TO-EXCEED AMOUNT

The total amount of compensation paid to Contractor for full completion of all work required by the Project during the entire term of the Project must not exceed $20,600.

DETAILED PROJECT COMPENSATION

As shown on Page 8 of the Bid Schedule

EXHIBIT C
CONSTRUCTION AGREEMENT

DISPUTE RESOLUTION

1. Disputes.

1 1 Commitment The parties commit to resolving all disputes promptly, equitably, and in a good-faith, cost-effective manner.

1.2 Application. The provisions of this Exhibit will be used by the parties to resolve all controversies, claims, or disputes ("Dispute") arising out of or related to this Agreement-including Disputes regarding any alleged breaches of this Agreement.

1 3 Initiation A party may initiate a Dispute by delivery of written notice of the Dispute, including the specifics of the Dispute, to the Representative of the other party as required in this Agreement

1 4 Informal Resolution. When a Dispute notice is given, the parties will designate a member of their senior management who will be authorized to expeditiously resolve the Dispute.

(A) The parties will provide each other with reasonable access during normal business hours to any and all non-privileged records, information and data pertaining to any Dispute in order to assist in resolving the Dispute as expeditiously and cost effectively as possible,

(B) The parties' senior managers will meet within 10 business days to discuss and attempt to resolve the Dispute promptly, equitably, and in a good faith manner, and

(C) The Senior Managers will agree to subsequent meetings if both parties agree that further meetings are necessary to reach a resolution of the Dispute.

2. Arbitration.

2.1 Rules If the parties are unable to resolve the Dispute by negotiation within 30 days from the Dispute notice, and unless otherwise informal discussions are extended by the mutual agreement, the Dispute will be decided by binding arbitration in accordance with Construction Industry Rules of the AAA, as amended herein. Although the arbitration will be conducted in accordance with AAA Rules, it will not be administered by the AAA, but will be heard independently.

(A) The parties will exercise best efforts to select an arbitrator within 5 business days after agreement for arbitration. If the parties have not agreed upon an arbitrator within this period, the parties will submit the selection of the arbitrator to one of the principals of the mediation firm of Scott & Skelly, LLC, who will then select the arbitrator The parties will equally share the fees and costs incurred in the selection of the arbitrator.

(B) The arbitrator selected must be an attorney with at least 15 years experience with commercial construction legal matters in Maricopa County, Arizona, be independent, impartial, and not have engaged in any business for or adverse to either Party for at least 10 years.

2 2 Discovery. The extent and the time set for discovery will be as determined by the arbitrator Each Party must, however, within ten (10) days of selection of an arbitrator deliver to the other Party copies of all documents in the delivering party's possession that are relevant to the dispute.

2.3 Hearing. The arbitration hearing will be held within 90 days of the appointment of the arbitrator The arbitration hearing, all proceedings, and all discovery will be conducted in Glendale, Arizona unless otherwise agreed by the parties or required as a result of witness location. Telephonic hearings and other reasonable arrangements may be used to minimize costs

2 4 Award. At the arbitration hearing, each Party will submit its position to the arbitrator, evidence to support that position, and the exact award sought in this matter with specificity. The arbitrator must select the award sought

by one of the parties as the final judgment and may not independently alter or modify the awards sought by the parties, fashion any remedy, or make any equitable order. The arbitrator has no authority to consider or award punitive damages.

2 5 Final Decision. The Arbitrator's decision should be rendered within 15 days after the arbitration hearing is concluded. This decision will be final and binding on the Parties

2.6 Costs The prevailing party may enter the arbitration in any court having jurisdiction in order to convert it to a judgment. The non-prevailing party shall pay all of the prevailing party's arbitration costs and expenses, including reasonable attorney's fees and costs.

3. **Services to Continue Pending Dispute.** Unless otherwise agreed to in writing, Contractor must continue to perform and maintain progress of required services during any Dispute resolution or arbitration proceedings, and City will continue to make payment to Contractor in accordance with this Agreement.

4. **Exceptions.**

4 1 Third Party Claims. City and Contractor are not required to arbitrate any third-party claim, cross-claim, counter claim, or other claim or defense of a third-party who is not obligated by contract to arbitrate disputes with City and Contractor

4 2 Liens. City or Contractor may commence and prosecute a civil action to contest a lien or stop notice, or enforce any lien or stop notice, but only to the extent the lien or stop notice the Party seeks to enforce is enforceable under Arizona Law, including, without limitation, an action under A R.S. § 33-420, without the necessity of initiating or exhausting the procedures of this Exhibit

4 3 Governmental Actions. This Exhibit does not apply to, and must not be construed to require arbitration of, any claims, actions or other process filed or issued by City of Glendale Building Safety Department or any other agency of City acting in its governmental permitting or other regulatory capacity.

PROJECT #
131425

ARIZONA STATUTORY PAYMENT BOND FOR CONSTRUCTION
PURSUANT TO TITLES 28, 34, AND 41, ARIZONA REVISED STATUTES
(Penalty of this bond must be 100% of the Contract Amount)

BOND NO 2141395

KNOW ALL MEN BY THESE PRESENTS

That, McKenna Contracting, LLC fter called Principal), as

Principal, and Old Republic Surety Company (hereinafter Surety), a corporation organized and

existing under the laws of the State of Wisconsin with its principal office in the City of Milwaukee Wolding a certificate of authority to transact surety business in Arizona issued by the Director of Insurance pursuant to Title 20,

Chapter 2, Article 1, as Surety, are held and firmly bound unto City of Glendale

(hereinafter Obligee) in the amount of TWENTY THOUSAND SIX HUNDRED & 00/100

Dollars ($20,600 00), for the payment whereof, Principal and Surety bind themselves, and their heirs, administrators, executors, successors and assigns, jointly and severally, firmly by these presents

WHEREAS, the Principal has entered into a certain written contract with the Obligee, dated the _____ day of _____, 20____, to construct and complete certain work described as

131425 Glendale Public Housing - Bathroom Remodel - Phase II

which contract is hereby referred to and made a part hereof as fully and to the same extent as if copied at length herein

NOW, THEREFORE, THE CONDITION OF THIS OBLIGATION IS SUCH, that if said Principal promptly pays all monies due to all persons supplying labor or materials to the Principal or the Principal's subcontractors in the prosecution of the work provided for in the contract, this above obligation is void Otherwise it remains in full force and effect

PROVIDED, HOWEVER, that his bond is executed pursuant to the provisions of Title 34, Chapter 2, Article 2, Arizona Revised Statutes, and all liabilities on this bond shall be determined in accordance with the provisions of Title34, Chapter 2, Article 2, Arizona Revised Statutes, to the same extent as if it were copied at length in this agreement

The prevailing party in suit on this bond shall recover as a part of his judgment such reasonable attorney fees that may be fixed by a judge of the court

Witness our hands this August 4, 2014

McKenna Contracting, LLC
Principal (Seal)
By
Title Manager

Old Republic Surety Company
Surety (Seal)
By
(Attorney-in-Fact)

Agency of Record Southwest Bond Services, Inc
9299 W Olive Ave Ste 109
Peoria AZ 85345

PROJECT #
131425

ARIZONA STATUTORY PERFORMANCE BOND FOR CONSTRUCTION
PURSUANT TO TITLES 28, 34, AND 41, ARIZONA REVISED STATUTES
(Penalty of this bond must be 100% of the Contract Amount)

BOND NO 2141395

KNOW ALL MEN BY THEST PRESENTS

That, McKenna Contracting, LLC ıereınafter called Prıncıpal), as

Prıncıpal, and Old Republıc Surety Company (hereınafter Surety), a corporatıon organızed and

exıstıng under the laws of the State of Wısconsın with ıts prıncıpal office ın the Cıty of Mılwaukee Wholdıng a certıfıcate of authorıty to transact surety busıness ın Arızona ıssued by the Dırector of Insurance pursuant to Tıtle 20,

Chapter 2, Artıcle 1, as Surety, are held and fırmly bound unto City of Glendale

(hereınafter Oblılgee) ın the amount of TWENTY THOUSAND SIX HUNDRED & 00/100

Dollars ($20,600 00), for the payment whereof, Prıncıpal and Surety bınd themselves, and their heırs, admınıstrators, executors, successors and assıgns, jointly and severally, fırmly by these presents

WHEREAS, the Prıncıpal has entered ınto a certaın wrıtten contract with the Obligee, dated the _____ day of _____, 20____, to construct and complete certaın work described as

131425 Glendale Public Housing - Bathroom Remodel - Phase II

which contract ıs hereby referred to and made a part hereof as fully and to the same extent as ıf copıed at length herein

NOW, THEREFORE, THE CONDITION OF THIS OBLIGATION IS SUCH, that ıf said Prıncıpal faithfully performs and fulfills all the undertakings, covenants, terms, condıtıons, and agreements of the contract durıng the orıgınal term of the contract and any extensıon of the contract, wıth or wıthout notıce of the Surety, and durıng the lıfe of any guaranty required under the contract, and also performs and fulfills all the undertakings, covenants, terms, condıtıons, and agreements of all duly authorized modıfıcatıons of the contract that may hereafter be made, notıce of which modıfıcatıons to the Surety being hereby waıved, the above obligatıon ıs void Otherwıse ıt remaıns ın full force and effect

PROVIDED, HOWEVER, that hıs bond ıs executed pursuant to the provısıons of Tıtle 34, Chapter 2, Artıcle 2, Arızona Revısed Statutes, and all lıabılıtıes on thıs bond shall be determıned ın accordance wıth the provısıons of Tıtle34, Chapter 2, Artıcle 2, Arızona Revısed Statutes, to the same extent as ıf ıt were copıed at length ın thıs agreement

The prevaılıng party ın suıt on thıs bond shall recover as a part of hıs judgment such reasonable attorney fees that may be fıxed by a judge of the court

Wıtness our hands thıs August 4, 2014

McKenna Contracting, LLC
Prıncıpal (Seal)
By _____
Title Manager

Old Republıc Surety Company
Surety (Seal)
By _____
(Attorney-ın-Fact)

Agency of Record Southwest Bond Services, Inc
9299 W Olive Ave Ste 109
Peorıa AZ 85345

OLD REPUBLIC SURETY COMPANY

POWER OF ATTORNEY

KNOW ALL MEN BY THESE PRESENTS. That OLD REPUBLIC SURETY COMPANY, a Wisconsin stock insurance corporation, does make, constitute and appoint.

JENNA L SPARKS, OF PEORIA, AZ

its true and lawful Attorney(s)-in-Fact, with full power and authority, not exceeding $20,000,000, for and on behalf of the company as surety, to execute and deliver and affix the seal of the company thereto (if a seal is required), bonds, undertakings, recognizances or other written obligations in the nature thereof, (other than bail bonds, bank depository bonds, mortgage deficiency bonds, mortgage guaranty bonds, guarantees of installment paper and note guaranty bonds, self-insurance workers compensation bonds guaranteeing payment of benefits, asbestos abatement contract bonds, waste management bonds, hazardous waste remediation bonds or black lung bonds), as follows

ALL WRITTEN INSTRUMENTS IN AN AMOUNT NOT TO EXCEED AN AGGREGATE OF

FIVE MILLION DOLLARS($5,000,000)---------- FOR ANY SINGLE

OBLIGATION, REGARDLESS OF THE NUMBER OF INSTRUMENTS ISSUED FOR THE OBLIGATION.

and to bind OLD REPUBLIC SURETY COMPANY thereby, and all of the acts of said Attorneys-in-Fact, pursuant to these presents, are ratified and confirmed This document is not valid unless printed on colored background and is multi-colored This appointment is made under and by authority of the board of directors at a special meeting held on February 18, 1982 This Power of Attorney is signed and sealed by facsimile under and by the authority of the following resolutions adopted by the board of directors of the OLD REPUBLIC SURETY COMPANY on February 18, 1982.

RESOLVED that, the president, any vice-president, or assistant vice president, in conjunction with the secretary or any assistant secretary, may appoint attorneys-in-fact or agents with authority as defined or limited in the instrument evidencing the appointment in each case, for and on behalf of the company to execute and deliver and affix the seal of the company to bonds, undertakings, recognizances, and suretyship obligations of all kinds, and said officers may remove any such attorney-in-fact or agent and revoke any Power of Attorney previously granted to such person.

RESOLVED FURTHER, that any bond, undertaking, recognizance, or suretyship obligation shall be valid and binding upon the Company

(i) when signed by the president, any vice president or assistant vice president, and attested and sealed (if a seal be required) by any secretary or assistant secretary, or

(ii) when signed by the president, any vice president or assistant vice president, secretary or assistant secretary, and countersigned and sealed (if a seal be required) by a duly authorized attorney-in-fact or agent, or

(iii) when duly executed and sealed (if a seal be required) by one or more attorneys-in-fact or agents pursuant to and within the limits of the authority evidenced by the Power of Attorney issued by the company to such person or persons

RESOLVED FURTHER, that the signature of any authorized officer and the seal of the company may be affixed by facsimile to any Power of Attorney or certification thereof authorizing the execution and delivery of any bond, undertaking, recognizance, or other suretyship obligations of the company, and such signature and seal when so used shall have the same force and effect as though manually affixed

IN WITNESS WHEREOF, OLD REPUBLIC SURETY COMPANY has caused these presents to be signed by its proper officer, and its corporate seal to be affixed this 13TH day of MARCH, 2014

OLD REPUBLIC SURETY COMPANY

Phyllis M Johnson
Assistant Secretary

OLD REPUBLIC SURETY COMPANY CORPORATE SEAL

Alan Pavlic
President

STATE OF WISCONSIN, COUNTY OF WAUKESHA-SS

On this 13TH day of MARCH, 2014, personally came before me, Alan Pavlic and Phyllis M Johnson, to me known to be the individuals and officers of the OLD REPUBLIC SURETY COMPANY who executed the above instrument, and they each acknowledged the execution of the same, and being by me duly sworn, did severally depose and say, that they are the said officers of the corporation aforesaid, and that the seal affixed to the above instrument is the seal of the corporation, and that said corporate seal and their signatures as such officers were duly affixed and subscribed to the said instrument by the authority of the board of directors of said corporation

KATHRYN R. PEARSON NOTARY PUBLIC STATE OF WISCONSIN

Kathryn R. Pearson
Notary Public
My commission expires 9/28/2014

(Expiration of notary commission does not invalidate this instrument)

CERTIFICATE

I, the undersigned, assistant secretary of the OLD REPUBLIC SURETY COMPANY, a Wisconsin corporation, CERTIFY that the foregoing and attached Power of Attorney remains in full force and has not been revoked, and furthermore, that the Resolutions of the board of directors set forth in the Power of Attorney, are now in force

50-5901

Signed and sealed at the City of Brookfield, WI this 4th day of August, 2014

OLD REPUBLIC SURETY COMPANY CORPORATE SEAL

Assistant Secretary

SOUTHWEST BOND SERVICES INC

THIS DOCUMENT HAS A COLORED BACKGROUND AND IS MULTI-COLORED ON THE FACE. THE COMPANY LOGO APPEARS ON THE BACK OF THIS DOCUMENT AS A WATERMARK. IF THESE FEATURES ARE ABSENT, THIS DOCUMENT IS VOID.

ORSC 22262 (5-10)

22851-W

ACORD®

CERTIFICATE OF LIABILITY INSURANCE

DATE (MM/DD/YYYY): 07/31/2014

THIS CERTIFICATE IS ISSUED AS A MATTER OF INFORMATION ONLY AND CONFERS NO RIGHTS UPON THE CERTIFICATE HOLDER. THIS CERTIFICATE DOES NOT AFFIRMATIVELY OR NEGATIVELY AMEND, EXTEND OR ALTER THE COVERAGE AFFORDED BY THE POLICIES BELOW. THIS CERTIFICATE OF INSURANCE DOES NOT CONSTITUTE A CONTRACT BETWEEN THE ISSUING INSURER(S), AUTHORIZED REPRESENTATIVE OR PRODUCER, AND THE CERTIFICATE HOLDER.

IMPORTANT. If the certificate holder is an ADDITIONAL INSURED, the policy(ies) must be endorsed. If SUBROGATION IS WAIVED, subject to the terms and conditions of the policy, certain policies may require an endorsement. A statement on this certificate does not confer rights to the certificate holder in lieu of such endorsement(s).

PRODUCER

Mohr & Associates, Inc.
706 E. Bell Rd. #100
Phoenix, AZ 85022

CONTACT NAME: Mohr, David A
PHONE (A/C, No, Ext): 602-482-5880 FAX (A/C, No): 602-457-0555
E-MAIL ADDRESS: dave@davemohragency.com

INSURER(S) AFFORDING COVERAGE	NAIC #
INSURER A: SECURA INSURANCE CO	
INSURER B:	
INSURER C:	
INSURER D:	
INSURER E:	
INSURER F:	

INSURED

MCKENNA CONTRACTING LLC
5154 W WINDROSE DR
GLENDALE, AZ 85304

COVERAGES **CERTIFICATE NUMBER:** **REVISION NUMBER:**

THIS IS TO CERTIFY THAT THE POLICIES OF INSURANCE LISTED BELOW HAVE BEEN ISSUED TO THE INSURED NAMED ABOVE FOR THE POLICY PERIOD INDICATED. NOTWITHSTANDING ANY REQUIREMENT, TERM OR CONDITION OF ANY CONTRACT OR OTHER DOCUMENT WITH RESPECT TO WHICH THIS CERTIFICATE MAY BE ISSUED OR MAY PERTAIN, THE INSURANCE AFFORDED BY THE POLICIES DESCRIBED HEREIN IS SUBJECT TO ALL THE TERMS, EXCLUSIONS AND CONDITIONS OF SUCH POLICIES. LIMITS SHOWN MAY HAVE BEEN REDUCED BY PAID CLAIMS.

INSR LTR	TYPE OF INSURANCE	ADDL INSR	SUBR WVD	POLICY NUMBER	POLICY EFF (MM/DD/YYYY)	POLICY EXP (MM/DD/YYYY)	LIMITS	
A	GENERAL LIABILITY X COMMERCIAL GENERAL LIABILITY CLAIMS-MADE / OCCUR GEN'L AGGREGATE LIMIT APPLIES PER POLICY / PRO-JECT / LOC	X		TC3189375	03/01/2014	03/01/2015	EACH OCCURRENCE	$ 1,000,000
							DAMAGE TO RENTED PREMISES (Ea occurrence)	$ 100,000
							MED EXP (Any one person)	$ 5,000
							PERSONAL & ADV INJURY	$ 1,000,000
							GENERAL AGGREGATE	$ 2,000,000
							PRODUCTS - COMP/OP AGG	$ 2,000,000
								$
A	AUTOMOBILE LIABILITY ANY AUTO X ALL OWNED AUTOS / SCHEDULED AUTOS X HIRED AUTOS / X NON-OWNED AUTOS Owned Private Pa / Owned Autos O/T P			A3189376	03/01/2014	03/01/2015	COMBINED SINGLE LIMIT (Ea accident)	$ 1,000,000
							BODILY INJURY (Per person)	$
							BODILY INJURY (Per accident)	$
							PROPERTY DAMAGE (Per accident)	$
								$
	UMBRELLA LIAB / OCCUR EXCESS LIAB / CLAIMS-MADE DED / RETENTION $						EACH OCCURRENCE	$
							AGGREGATE	$
								$
	WORKERS COMPENSATION AND EMPLOYERS' LIABILITY ANY PROPRIETOR/PARTNER/EXECUTIVE OFFICER/MEMBER EXCLUDED? Y / N (Mandatory in NH) If yes, describe under DESCRIPTION OF OPERATIONS below	N / A					WC STATU-TORY LIMITS / OTH-ER	
							E.L. EACH ACCIDENT	$
							E.L. DISEASE - EA EMPLOYEE	$
							E.L. DISEASE - POLICY LIMIT	$

DESCRIPTION OF OPERATIONS / LOCATIONS / VEHICLES (Attach ACORD 101, Additional Remarks Schedule, if more space is required)

CITY OF GLENDALE ADDED AS ADDITIONAL INSURED.

CERTIFICATE HOLDER

CITY OF GLENDALE, ARIZONA
ATTN ENGINEERING DEPT
5850 W GLENDALE AVE
GLENDALE, AZ 85301

CANCELLATION

SHOULD ANY OF THE ABOVE DESCRIBED POLICIES BE CANCELLED BEFORE THE EXPIRATION DATE THEREOF, NOTICE WILL BE DELIVERED IN ACCORDANCE WITH THE POLICY PROVISIONS.

AUTHORIZED REPRESENTATIVE

© 1988-2010 ACORD CORPORATION. All rights reserved.

The ACORD name and logo are registered marks of ACORD

THIS ENDORSEMENT CHANGES THE POLICY. PLEASE READ IT CAREFULLY.

ADDITIONAL INSURED - OWNERS, LESSEES OR CONTRACTORS

This endorsement modifies insurance provided under the following:

BUSINESSOWNERS POLICY

SCHEDULE*

Name Of Person Or Organization:
CITY OF GLENDALE, ARIZONA
5850 W GLENDALE AVE
GLENDALE AZ 85301

* Information required to complete this Schedule, if not shown on this endorsement, will be shown in the Declarations.

The following is added to Paragraph C. Who Is An Insured in the Businessowners Liability Coverage Form:

4. Any person or organization shown in the Schedule is also an insured, but only with respect to liability arising out of your ongoing operations performed for that insured.

Copyright, Insurance Services Office, Inc., 1997

CITY OF GLENDALE, ARIZONA
PUBLIC WORKS/ENGINEERING DEPARTMENT

CONTRACTOR'S AFFIDAVIT
REGARDING
SETTLEMENT OF CLAIMS

PROJECT 131425 - GLENDALE PUBLIC HOUSING - BATHROOM REMODEL - PHASE II

To the City of Glendale, Arizona

Gentlemen:

This is to certify that all lawful claims for materials, rental of equipment and labor used in connection with the construction of the above project, whether by subcontractor or claimant in person, have been duly discharged.

The undersigned, for the consideration of $_____ , as set out in the final pay estimate, as full and complete payment under the terms of the contract, hereby waives and relinquishes any and all further claims or right of lien under, in connection with, or as a result of the above described project. The undersigned further agrees to indemnify and save harmless the City of Glendale against any and all liens, claims of liens, suits, actions, damages, charges, costs, litigation expenses, attorneys' fees and any other and expenses whatsoever, which said City may suffer arising out of the failure of the undersigned to pay for all labor performance and materials furnished for the performance of said installation.

Signed and dated at _____ , this _____ day of _____ , 20___.

_____
Contractor

By _____

STATE OF ARIZONA)
) ss.
COUNTY OF MARICOPA)

The foregoing instrument was subscribed and sworn to before me this ___ day of _____, 20
.

_____
Notary Public

My Commission Expires: _____

SUPPLEMENTAL GENERAL CONDITIONS

1. GENERAL: By Ordinance No. 1110 New Series, the City of Glendale adopted the "Uniform Standard Specifications for Public Works Construction," which are sponsored and distributed by the Maricopa Association of Governments. Copies of these documents, with revisions, are on file in the office of the City Engineer of the City of Glendale, and are hereby made a part of these Contract Documents.

Whenever in the Uniform Standard Specifications, the words "The Contracting Agency" are used, the meaning shall be the City of Glendale.

In all cases where ASTM, AASHTO, AWWA, USAG, Federal, City of Phoenix, MAG Specifications, Maricopa County, Arizona State Highway, City of Glendale or other standard specifications are referred to, unless otherwise stated, revisions, supplements or addenda issued on or before the date of this contract, shall prevail. In the event of any conflict between these project specifications and the requirements of the plans, detail drawings, MAG Standard Details and Specifications, these project specifications shall prevail.

2. DEFINITIONS: The following terms, as used in or pertaining to the Contract Documents, are defined as follows:

CITY: The word "City" refers to the City of Glendale, Arizona. The official representative of said City in these proceedings shall be the City Engineer.

CONTRACTOR: The word "Contractor" means the person, firm, or corporation with whom the Contract is made by the City.

MATERIALS: The term "Materials" includes, in addition to materials incorporated in the project, equipment and other material used and/or consumed in the performance of the work.

SUBCONTRACTOR: The word "Subcontractor" includes those having a direct contract with the Contractor and those who furnish material worked to a special design according to the plans and/or specifications for this work, but does not include those who merely furnish materials not so worked.

ENGINEER: The word "Engineer" means a person, firm or corporation duly authorized by the City, to act for the City in staking out the work, inspecting materials and construction, and interpreting plans and specifications.

CONTRACT DOCUMENTS: The words "Contract Documents" mean the Notice to Contractors, Information for Bidders, "Uniform Standard Specifications for Public Works Construction," MAG General Conditions, Supplemental General Conditions, Special Provisions, Supplemental Specifications, Proposal, Contract, Payment Bond, Performance Bond, Certificates of Insurance, Plans and Addenda thereto.

3. PROPOSAL QUANTITIES: It is expressly understood and agreed by the parties hereto that the quantities of the various classes of work to be done and material to be furnished under this Contract, which have been estimated as stated in the Proposal, are only approximate and are to be used SOLELY for the purpose of comparing, on a consistent basis, the proposals offered for the work under this Contract; and the Contractor further agrees that the City will not be held responsible if any of the quantities shall be found incorrect; and the Contractor will not make any claim for damages or for loss of profits because of a difference between the quantities of the various classes of work as estimated and the work actually done. If any error, omission, or mis-statement is found to occur in the estimated quantities, the same shall not invalidate this Contract or release the Contractor from the execution and completion of the whole or any part of the work in accordance with the specifications and the plans herein mentioned, or for the prices herein agreed upon and fixed therefore, or excuse him from any of the obligations or liabilities hereunder, or entitle him to any damages or compensation except as may be provided for in this Contract.

4. WITHDRAWAL OF PROPOSALS: No proposal shall be withdrawn following the opening and reading of the bids for a period of 50 days from the date of opening without the consent of the contracting agency through the body or agent duly authorized to accept or reject the proposal.

5. LOSSES AND DAMAGES: All loss or damage arising out of the nature of the work to be done or from the action of the elements, or from any unforeseen circumstances in the prosecution of the same, or from any unusual obstructions or difficulties which may be encountered in and/or during the prosecution of the work, or from any casualty whatsoever of every description, shall be sustained and borne by the Contractor at his own cost and expense except as otherwise provided by the contract documents or the laws of the State of Arizona.

6. DUST PREVENTION: The Contractor shall take whatever steps, procedures or means required to prevent abnormal dust conditions due to his construction operations in connection with this contract. The dust control measures shall be maintained at all times during construction of the project, to the satisfaction of the Engineer, in accordance with the requirements of the "Maricopa County Health Department Air Pollution Control Regulations" which have been adopted pursuant to A.R.S. § 36-779.

The Contractor shall be required to obtain the necessary permit from the Maricopa County Air Pollution Control Bureau, 1001 N. Central Ave., Phoenix, Arizona 85004 - telephone (602) 506-6727.

7. EXCESS MATERIAL: Excess material shall be removed from the work site and wasted at a location approved by the Engineer. Broken concrete and asphalt may be delivered to the Glendale Sanitary Landfill located at 115th Avenue and Glendale Avenue. The prevailing regulations and fee schedule <u>will not be waived for work under this project</u>. All materials, to be disposed of at the landfill, shall be weighed and disposed of at the prevailing rate.

8. STOCKPILE OF MATERIALS: The Contractor may place or stockpile materials in the public right-of-way, if approved by the Engineer, provided they <u>do not</u> prevent access to adjacent properties or prevent compliance with traffic regulations.

Traffic <u>shall not</u> be required to travel over stockpiled materials, and proper dust control shall be maintained.

9. REFUSE COLLECTION ACCESS: At any time the project construction shall require the closure or disruption of traffic in any roadway, alley, or refuse collection easement such that normal refuse collection will be interfered with, the Contractor shall, at least 48 hours prior to causing such closure or disruption, make arrangements with the Field Operations Department in order that refuse collection service can be maintained.

10. CLEAN-UP: After all work under this contract is completed, the Contractor shall remove all loose concrete, lumber, wire, reinforcing, debris, and other materials not incorporated in the work, from the site of the work. Clean-up shall include the removal of all excess pointing mortar materials within pipes and removal of over-size rocks and boulders left after finish grading. The contractor shall provide for the legal disposal of all waste products, debris, etc., and shall make necessary arrangements for such disposal.

11. SHOP DRAWINGS: The Contractor shall provide shop drawings as may be necessary for the prosecution of the work as required by the contract documents. The Engineer shall promptly review all shop drawings. The Engineer's approval of any shop drawing shall not release the Contractor from responsibility for deviations from the contract documents. The approval of any shop drawing which substantially deviates from the requirements of the contract documents shall be evidenced by a change order.

When submitted for the Engineer's review, shop drawings shall bear the contractor's certification that he has reviewed, checked, and approved the shop drawings and that they are in conformance with the requirements of the contract documents.

Portions of the work requiring a shop drawing or sample submission shall not begin until the shop drawing or sample submission has been approved by the Engineer. A copy of each approved shop drawing and each approved sample shall be kept in good order by the Contractor at the site and shall be available to the Engineer.

12. PROTECTION OF FINISHED OR PARTIALLY FINISHED WORK: The Contractor shall properly guard and protect all finished or partially finished work, and shall be responsible for the same until the entire contract is completed and accepted, in writing, by the City. The Contractor shall turn over the entire work in full accordance with the specifications before final settlement shall be made.

13. STATUS OF EMPLOYEES: Contractor shall be responsible for assuring the legal working status of its employees and its subcontractor's employees.

14. LAWS AND REGULATIONS: This Contract shall be governed by and constructed in accordance with the laws of the State of Arizona. The Contractor shall keep himself fully informed of all existing and future City and County Ordinances and Regulations and State and Federal Laws and Occupational Safety and Health Standards (OSHA) in any manner affecting the work herein specified. He shall at all times observe and comply with said Ordinances, Regulations, or Laws.

15. PERMITS: The City has obtained certain required permits which are included in the project specifications, but it will be the duty of the Contractor to determine that all the necessary permits have been obtained. The Contractor shall, at his own expense, obtain all required permits which have not been furnished by the City. A no-fee permit will be issued for work in the City of Glendale right-of-way and easement. (Also see Paragraph 7. Dust Prevention.)

16. ELECTRIC POWER AND WATER: The Contractor shall make his own arrangements for electric power and water. Subject to the convenience of the City, he may be permitted to connect to existing facilities where available, but he shall meter and bear the cost of such power or water. Fire hydrant meters may be obtained from the City of Glendale. Installation and removal of meters should be scheduled through the City's Water Services/Utilities Division at 930-2700. For details and current rates, please visit http://www.glendaleaz.com/CrossConnection/firehydrantmeterprogram.cfm.

17. SURVEY CONTROL POINTS AND MONUMENTS: Existing survey monuments indicated on the plans or found during construction shall be protected by the Contractor, and in the event removal is necessary, removal and replacement shall be performed by permission of the Engineer, under direct supervision of the Engineer or his authorized representative. Survey monuments shall be constructed to conform to the requirements of MAG Specifications, Section 405, and Standard Details.

18. EXISTING UTILITIES: The Contractor is hereby advised that the location of all utilities, as shown on the plans, may not be complete nor exact and the Contractor shall satisfy himself as to the exact location of the utilities by contacting Blue Stake or the utility companies before proceeding with the work. After the underground utilities are located by Blue Stake or the utility company, the contractor shall excavate in a careful and prudent manner to prevent unwillful damage to the underground utilities.

In the event the Contractor or its Subcontractor damages an existing, properly identified underground City of Glendale water or sewer line, the Contractor shall be responsible for the repairs at its expense.

The exact location of all existing underground service utilities, whether or not indicated on the plans, shall be determined by the Contractor at no expense to the City, and he shall conduct his work so as to prevent interruption of service or damage to them.

The Contractor shall protect existing utility services and be responsible for their replacement if damaged by him, or to make necessary adjustment in their location, if required, in order to complete the work for his Contract.

Utility companies and other interested parties have been provided with construction plans and the

construction schedule for this project. The Contractor shall comply with MAG Specifications 105.6 to cooperate with the utility companies.

19. MAINTENANCE OF IRRIGATION FACILITIES: Where irrigation facilities interfere with construction, the Contractor shall remove and replace the affected irrigation facilities to its original condition. Final acceptance of replaced facilities will depend upon final approval of the Engineer.

20. OVERHEAD UTILITY LINES AND POLES: Contractor is advised that when work around overhead lines and poles is required on a project the Contractor is required to coordinate with Utility Companies who own and operate overhead lines and poles. The coordination may include, but not be limited to the following activities: pole bracing, de-energizing of lines, and temporary relocations. Contractor is responsible to contact the applicable Utility Company representative and discuss his proposed construction methods; in order to determine what actions the Utility Company must take and the costs related to those actions. The Contractor shall include these costs in the applicable bid items for this project.

The primary and the backup representatives for this review and cost determinations are as follows:

Arizona Public Service:	Mr. Bobby Garza	602-371-7989
Qwest:	Mr. Ron Floyd	602-630-1932
Salt River Project:	Mr. Tim Rinn	602-236-8694
Salt River Project:	Ms. Mariann Ward	602-236-6389
Cox Communications:	Mr. Ron Pint	623-328-3529
Cox Communications:	Ms. Linda Facio	623-328-3500

21. SOUTHWEST GAS FACILITIES EXPOSED DURING CONSTRUCTION: The Contractor, upon exposing a gas line during construction, shall call SOUTHWEST GAS at 602-271-4277. The Southwest Gas patrolman will respond, usually within an hour, to inspect the line. Minor cuts or abrasions to the pipe coating will be rewrapped and tracer wire will be reconnected at no cost to the City.

22. UNDERGROUND UTILITIES' BEDDING: All water, sewer, storm drain, irrigation and other conduits installed within the City of Glendale shall be bedded from bottom of excavation to one foot above the pipe with granular bedding material meeting the requirements of Section 601.4.6 of MAG Uniform Standard Specifications. The initial bedding under the pipe shall follow City of Glendale Detail G-690.

23. SEWER SERVICE LINES: The Contractor shall be responsible for locating, and protecting from damage during construction, all sewer service lines within the project which are not owned by the City. Contractor will be permitted to review the "as-builts" to assist Contractor in locating the non-City owned sewer service lines. These "as-builts" were prepared, and supplied to the City, by private developers or contractors who installed the non-City owned sewer service lines. Therefore, the City does not guarantee or warranty the accuracy of such "as-builts" and the contractor, as a condition for being allowed to review such "as-builts", hereby agrees to hold the City harmless for any and all damages or other expenses contractor may incur as a result of any inaccuracies or incorrect information in these "as-builts".

24. RIGHTS-OF-WAY: The City will provide rights-of-way and easements for all work specified in this Contract, and the Contractor shall not enter or occupy with man, tools, equipment or materials any private ground outside the property of the City of Glendale, Maricopa County, Arizona, without the consent of the property owner.

25. SUBCONTRACTS: Subcontracts shall be in accordance with, and the Contractor shall be bound by, the following provisions:

All subcontracts shall be subject to the approval of the City.

All subcontracts shall be in writing and shall provide that all work to be performed thereunder shall be performed in accordance with the terms of the Contract.

Certified copies of any and all subcontracts shall be furnished to the City Engineering Department; however, prices may be omitted.

Subcontracts shall conform to the regulations governing employment of labor.

The subcontracting of any part of the work will in no way relieve the Contractor of his responsibility under the Contract.

26. PRE-CONSTRUCTION CONFERENCE: After completion of the Contract Documents, to include bonds, insurance and signatures, and prior to the commencement of any work on the project, the Engineer will schedule a Pre-Construction Conference. This will be held at the City of Glendale, 5850 West Glendale Avenue, Glendale, Arizona.

The purpose of this Conference is to establish a working relationship between the Contractor, Utility Companies, and the Engineer. The agenda will include critical elements of the construction schedule, procedures for handling shop drawings and other submittals, cost breakdown of major lump sum items, payment application and processing, coordination with the involved utility companies, emergency telephone numbers for all representatives involved in the course of construction, and establishment of the Notice to Proceed date.

Minimum attendance by the Contractor shall be a responsible official of the company/corporation, who is authorized to execute and sign documents on behalf of the company/corporation.

27. OVERTIME:

Regular Work Hours: The work required to be performed by the Plans and Specifications for the Project shall be performed only during regular working hours, unless the City has authorized overtime work in accordance with the procedures set forth below. Regular working hours shall be defined as one 8-1/2 hour shift per day, Monday through Friday, or, upon prior approval of the City, one 10-1/2 hour shift per day on a compressed four day work week during Monday through Friday. Regular working hours shall not include Saturdays, Sundays or City recognized legal holidays.

Authorization and Costs: If the Contractor desires to schedule work for times other than regular work hours (overtime), the Contractor shall make a written request to the City at least two business days prior to the scheduled overtime. The City reserves the right to deny the request to work overtime based on the best interest and needs of the City. If an overtime request is denied, the City may, at its sole discretion, extend the contract time at no additional costs to the City.

In the event the Contractor does perform work overtime, with or without the prior approval of the City, the Contractor shall be responsible to the City for all additional costs that may be incurred by the City as a result of the Contractor's overtime work, including costs for engineering, inspections, testing, surveying and construction administration, all in accordance with MAG Section 108.5. However, the Contractor shall not be responsible for City's costs incurred as a result of overtime work requested by the City or overtime work resulting from an emergency which is not the responsibility of the Contractor or its employees, subcontractors or suppliers. The City's cost will be billed directly to the Contractor or may, at the City's option, be deducted from monies due the Contractor.

28. CONTRACTOR'S CONSTRUCTION SCHEDULE: Concurrently, with the execution of the contract and prior to the pre construction conference, the Contractor shall submit a preliminary schedule for the Engineer's review and acceptance. The schedule shall be in sufficient detail to allow the Engineer to determine if the proposed schedule will conform to an acceptable program of construction operations, as determined by the contracting agency. Within ten calendar days after the preliminary schedule, described above, has been accepted by the Engineer, the Contractor shall submit a progress schedule, utilizing the critical path method scheduling technique, showing the order in which he proposes to carry out the work, the dates on which he will start each phase of the work, and the contemplated date for completion of each phase. The Contractor shall not be permitted to commence construction until the schedule complying with this paragraph has been submitted to the

City. The Contractor will not be granted any extension to the contract time or compensation for any damages as a result of the City's refusal to allow Contractor to commence construction until the critical path method progress schedule has been submitted and accepted by the Engineer.

The critical path method (CPM) scheduling technique requires a breakdown of the entire work into individual tasks and an analysis of the number of days required to perform each task. The schedule submitted to the City should highlight and identify the critical path for the project. After the work is in progress, the Contractor shall submit supplementary progress schedules, using the critical path method technique, of the progress to date and projection for completion. The supplementary progress schedules shall be submitted with each pay request in accordance with the paragraph, "Payments to Contractors," of these Supplemental General Conditions. The progress schedules shall be subject to the acceptance of the Engineer. In the event the Contractor fails to submit a supplementary progress schedule acceptable to the Engineer, the City may withhold further progress payments to the Contractor until the Contractor submits an acceptable supplementary progress schedule, which is accepted by the Engineer, to the City. Schedule changes requiring an increase in the City's engineering personnel on the project shall not be put into effect until the Engineer has approved such increase and made arrangements for the required additional personnel.

29. CHARACTER OF WORKMEN: None but skilled foremen and workmen shall be employed on work requiring special qualifications. When required by the Engineer, the Contractor shall discharge any person who is, in the opinion of the Engineer, disorderly, dangerous, insubordinate, incompetent, or otherwise objectionable. The Contractor shall keep the City harmless from damages or claims for compensation that may occur in the enforcement of this section of the specifications.

30. HINDRANCES AND DELAYS: Except as otherwise provided herein, no charge shall be made by the Contractor for hindrances or delays from any cause during the progress of the work embraced in this Contract; but such delays, if due to no fault or neglect of the Contractor, shall entitle the Contractor to an extension of time allowed for completing the work, sufficient to compensate for the delay, the amount of the delay to be determined by the Engineer, provided the Contractor shall give said Engineer immediate notice in writing of the cause of such delay.

30.1 Delay: In the event of a delay for which the City is solely responsible, which is unreasonable under the circumstances and which was not within the contemplation of City and Contractor at the time this Contract is executed, City and Contractor shall negotiate, in good faith, a payment by the City to Contractor for the expenses incurred by Contractor as a result of such delay, in accordance with the City of Glendale Engineering Department's POLICY STATEMENT FOR CALCULATING DELAYS AND DAMAGES. This provision shall not be construed to void any provision in the contract which requires notice of delay or provides for liquidated damages. However, if the delay is the result of any act or neglect of a third party, including the architect, engineer or other contractor employed by the City, or by labor disputes, fire, unusual delay in transportation, adverse weather conditions not reasonably foreseeable, unavoidable casualties, or any causes beyond the Contractor's control, the Contractor shall not be entitled to any payments or compensation for expenses incurred as a result of such delay, but the Contract Time shall be extended by Change Order for such reasonable time as the Engineer may determine. No extension or compensation will be granted for any delay which is the result, wholly or partially, of any act or neglect of Contractor or any Subcontractor hired by Contractor.

31. LIQUIDATED DAMAGES:

31.1 Should the contractor fail to substantially complete the work under this contract within the time for completion stated in the paragraph "Time of Completion," in the Information for Bidders, then the contractor shall pay the City of Glendale, Arizona, liquidated damages, pursuant to the provisions of Section 108.9, Standard Specifications for Public Works Construction, Maricopa Association of Governments, until the work is substantially complete.

31.2 Should the contractor fail to fully and finally complete the work under this contract within the time for completion set forth in the paragraph "Time of Completion," in the Information for Bidders, even though the contractor has achieved substantial completion of the work within such time, then the

contractor shall pay the City of Glendale, liquidated damages (pursuant to the provisions of Section 108.9, Standard Specifications for Public Works Construction, Maricopa Association of Governments), in an amount equal to 100% of the applicable liquidated damage rate set forth in MAG Section 108.9 for each and every calendar day of delay until the work is fully and finally complete and accepted.

31.3 The date of substantial completion shall be the date when the work is sufficiently complete, in accordance with the contract documents, so the owner can fully occupy and utilize the work or designated portion thereof for the use for which it is intended, with all the project's parts and systems operable as required by the contract documents and all the work is complete, accessible, operable, and usable by the owner for its intended purpose(s), and all parts, systems and sitework are 100% complete and cleaned for the owner's use. Only incidental corrective work and final cleaning (if required), beyond cleaning needed for the owner's full use, may remain for final completion.

31.4 Full and final completion shall be that date when all work under the project, including incidental corrective work under punch list and final cleaning, has been completed and the entire project is accepted by the owner.

32. PAYMENTS TO CONTRACTOR: The measurements of quantities and the payments to the Contractor shall be in accordance with MAG Uniform Standard Specifications for Public Works Construction, Part 100 - General Conditions, Section 109 - Measurements and Payments.

Payments will be made on the basis of itemized, monthly statements prepared by the City and signed by the Contractor. The Contractor shall submit an itemized, duly certified and approved estimate for work completed through the last day of the preceding month in accordance with MAG Specifications, as amended by these Supplemental General Conditions. Upon approval of the pay estimate, the City will mail the check directly to the Contractor.

The pay estimate shall be accompanied by an updated progress schedule as required by these Supplemental General Conditions and a cash flow report when required by the Special Provisions. Approval of progress payments shall be conditional upon submittal of progress schedules and cash flow reports, when required, which are acceptable to the Engineer.

Upon 100% completion and acceptance of the project, and with the request for final payment, the Contractor shall complete and submit the "Contractor's Affidavit Regarding Settlement of Claims" form which is included in these specifications. Before final payment and release of retention, Contractor must arrange for its Surety to provide the City with a fully executed AIA Consent of Surety form. To avoid delays in the final payment, the Surety may send the Consent of Surety directly to the City via fax at (623) 915-2861, and mail the original to the City of Glendale Engineering Department, 5850 West Glendale Avenue, Glendale, Arizona 85301. Should any ambiguity arise between the Contract and these Conditions, the provisions of the Contract shall prevail.

33. WARRANTY: This project shall have a 2 year warranty. The warranty period shall begin upon final acceptance of the work by the City of Glendale.

END OF SUPPLEMENTAL GENERAL CONDITIONS

SPECIAL PROVISIONS

1. SCOPE OF WORK: Contract shall remodel bathrooms in various apartments in the Lamar Housing Complex, located at 6842 N. 61st Avenue, Glendale Arizona.

2. DEFINITIONS:

A. Section: Reference to a Section on the plans or in these Specifications shall mean a Section of the Uniform Standard Specifications for Public Works Construction, sponsored and distributed by Maricopa Association of Governments (MAG), latest revision. The provisions of MAG Uniform Standard Specifications and Details for Public Works Construction, which are not altered or modified by the drawings or by these Special Provisions or by any subsequently issued Addendum, shall apply to the contract even though the Contractor's attention is not specifically drawn to such provisions.

B. Standard Detail: Reference to a MAG Standard Detail (MAG S.D.) on the plans or in these specifications shall mean a standard detail drawing in the latest revision of the Uniform Standard Specifications for Public Works Construction, sponsored and distributed by Maricopa Association of Governments. City of Glendale Standard Detail (C.O.G. S.D.) shall mean a standard detail drawing in the City of Glendale's Engineering Design and Construction Standards, latest revision. City of Phoenix Standard Detail (C.O.P. S.D.) shall mean a standard detail drawing in the Phoenix Supplemental Standard Details for Public Works Construction, latest revision.

3. SUSPENSION OF WORK: The Engineer reserves the right to suspend the work wholly or in part if deemed necessary for the best interest of the City. This suspension will be without compensation to the Contractor, other than to adjust the contract time in accordance with MAG Section 108.

4. COMPLIANCE WITH MANUFACTURER'S INSTRUCTIONS: In all instances wherein the item and/or specifications require installation or construction in accordance with either manufacturer's or supplier's recommendations and/or instructions, said recommendations and/or instructions shall be submitted with the applicable portions clearly marked for approval prior to the commencement of work on that item or portion of the contract.

5. ENERGIZED AERIAL ELECTRICAL POWER LINES: The utility company maintains energized aerial electrical power lines in the immediate vicinity of this project. Do not consider these lines to be insulated. Construction personnel working in proximity to these lines are exposed to an extreme hazard from electrical shock. Contractors, their employees, and all other construction personnel working on this project must be warned of the danger and instructed to take adequate protective measures, including maintaining a minimum ten (10) feet clearance between the lines and all construction equipment and personnel. (See: OSHA Standard 1926.550(a)15.) As an additional safety precaution, Contractors should also be instructed to call the utility company to arrange, if possible, to have these lines de-energized or relocated when the work reaches their immediate vicinity. The cost of such temporary arrangements would be borne by the Contractor. The utility company can often respond to such requests if two days advance notice is given, but some situations may require up to sixty (60) days lead time for relocation or other arrangements.

6. RECORD DRAWINGS: The Contractor shall maintain one set of contract drawings with all changes, deviations, additions and deletions clearly marked thereon. Upon completion of the work, this set of drawings, shall be marked "RECORD DRAWINGS," dated, and delivered to the Engineer prior to approval of the Contractor's final payment request.

7. ALLOWANCE FOR CONSTRUCTION CONTINGENCIES: Bid schedule includes a lump sum contingency allowance. This allowance is at all times the property of the City and is for the sole purpose of reimbursing Contractor for any unforeseen work not apparent at the time of bidding or additional work requested by the CITY OF GLENDALE.

No work anticipated for reimbursement under this Bid Item shall be initiated by Contractor until Contractor, City of Glendale Representative and City of Glendale agree on the scope and cost to perform the additional work. The Contractor shall prepare and submit to City of Glendale

Representative a cost itemization and summary for the additional work. City of Glendale Representative and City of Glendale shall review and approve prior to Contractor proceeding with any additional work. Any portion of the stated sum not expended remains the property of the City of Glendale.

Work under this section shall consist of any additional work identified by the owner and contractor due to construction activity. All work under this item shall be itemized as per MAG requirements and deducted from the set amount of $1,000. All work under this section shall include but is not limited to all necessary materials, tools, layout, survey and labor required to complete each task.

Measurement and payment for this item shall be made on an individual basis per task and as described above. Limit for this item is set at $1,000 on the bid form, under line item ALLOWANCE FOR CONSTRUCTION CONTINGENCY.

END OF SPECIAL PROVISIONS

GENERAL DEMOLITION NOTES:

SEE SECTION 02 01 00-
MAINTENANCE OF EXISTING CONDITIONS: AND 02 41 19
SELECTIVE DEMOLITION FOR ADDITIONAL INFO

1. THE CONTRACTOR FOR THIS WORK SHALL BE RESPONSIBLE FOR THE SAFE PROSECUTION OF THE WORK OF THIS PROJECT AND SHALL COMPLY WITH THE REQUIREMENTS OF ADOPTED BUILDING CODES, LATEST EDITIONS. THE PERMITS WILL BE PROVIDED BY THE CITY OF GLENDALE
2. PROVIDE AND INSTALL ALL SHORING, BRACING AND/OR BARRICADES REQUIRED TO PROTECT THE PUBLIC AND PREVENT MOVEMENT, SETTLEMENT OR COLLAPSE OF STRUCTURES TO BE DEMOLISHED AND ADJACENT STRUCTURES TO REMAIN. ESPECIALLY PREVENT ALL DAMAGE TO 4' MASONRY WALLS.
3. ALL WORK SHALL BE COORDINATED WITH THE WORK OF ALL OTHER TRADES IN AFFECTED AREAS, AND WITH UTILITY COMPANIES AND THE CITY OF GLENDALE AS NECESSARY.
4. ALL OPERATIONS SHALL BE PLANNED TO CAUSE THE MINIMUM AMOUNT OF INTERFERENCE WITH NORMAL ROUTINE FUNCTIONING OF EXISTING FACILITIES. ALL WORK SHALL BE PLANNED AND PROVIDED SO THAT THE AREAS OF OPERATION ARE SECURED AGAINST ANY UNAUTHORIZED ENTRY AT ANY TIME. ALSO ALL AREAS OF THE PROJECT SHALL BE SECURED AGAINST HARMFUL ACTIONS OF THE ELEMENTS DURING THE ENTIRE COURSE OF THE PROJECT. EGRESS AND ACCESS AS REQUIRED BY ADOPTED BUILDING CODES AND OFFICIALS, FROM AND THROUGH EXISTING FACILITIES, SHALL BE MAINTAINED CONTINUOUSLY.
5. PRIOR TO THE START OF ANY DEMOLITION WORK NOTIFY THE ARCHITECT AND SUBMIT A PROPOSED DEMOLITION SCHEDULE FOR REVIEW AND APPROVAL. CEILINGS, WALLS AND/OR FLOORS DAMAGED BY DEMOLITION WORK SHALL BE RESTORED TO THEIR ORIGINAL CONDITION USING THE SAME MATERIALS AS EXISTING. IN EACH ROOM OR AREA, THE CEILING SHALL BE REPAIRED AND REFINISHED TO MATCH THE EXISTING CEILINGS, ALL ITEMS OTHER THAN WALLS, FLOORS AND / OR CEILINGS IN AFFECTED AREAS SHALL BE PROTECTED FROM DAMAGE, BUT IF DAMAGED, SHALL BE RESTORED TO NEW CONDITION OR REPLACED, LIKE FOR LIKE, AT NO COST TO THE CITY OF GLENDALE.
6. CONTRACTOR SHALL TAKE ALL REASONABLE PRECAUTIONS TO PREVENT DISTURBANCES DUE TO EXCESS NOISE, DUST AND LIGHT. DEMOLITION AND CONSTRUCTION NOISE SHALL BE KEPT TO A REASONABLE MINIMUM, AND ACOUSTIC AND DUST BARRICADES SHALL BE PROVIDED IN AREAS ADJACENT TO FUNCTIONING AREAS, AND IN OTHER AREAS AS DIRECTED BY THE ARCHITECT AND IN ACCORDANCE WITH ADEQ REQUIREMENTS. WORK HOURS SHALL BE LIMITED TO THOSE ALLOWED BY THE CITY OF GLENDALE.

GLENDALE PUBLIC HOUSING - BATHROOM REMODEL

DESIGN ONE, INC.
MANI SUBRA, AIA, ARCHITECT
ARCHITECTS • PROJECT MANAGERS • CONST MANAGEMENT
16071 N. 76TH STREET, SUITE #101 SCOTTSDALE, AZ 85260
(480) 860-8028 / FAX (480) 998-9507
Email mail@designonearchitects.com

REGISTERED ARCHITECT
CERTIFICATE NO
21845
MANI
SUBRA
Date Signed 5/6/2014
ARIZONA, U.S.A.
Expires: 1/31/2015

PROJECT #112009
SCALE: 1/2" = 1'-0"

A-1

GENERAL DEMOLITION NOTES (CONT.):

7. COVER AND PROTECT EQUIPMENT AND FIXTURES TO REMAIN FROM SOILING OR DAMAGE WHEN DEMOLITION WORK IS PERFORMED IN AREAS FROM WHICH SUCH ITEMS HAVE BEEN REMOVED.
8. COORDINATE BUILDING DEMO WORK WITH PLUMBING, MECHANICAL, ELECTRICAL DEMOLITION REQUIREMENTS.
9. UPON COMPLETION OF DAILY CONSTRUCTION WORK, REMOVE TOOLS, EQUIPMENT, DEBRIS, RUBBISH AND OTHER MATERIALS RESULTING FROM CONSTRUCTION OPERATIONS FROM BUILDING SITE. REMOVE PROTECTION AND LEAVE AREA CLEAN. TRANSPORT AND LEGALLY DISPOSE OF ALL MATERIALS OFF-SITE.
10. BURNING OF REMOVED MATERIALS IS NOT PERMITTED ON PROJECT SITE.
11. REPAIR ADJACENT CONSTRUCTION OR SURFACES SOILED OR DAMAGED BY SELECTIVE DEMOLITION WORK, AT NO COST TO THE CITY OF GLENDALE.
13. EXISTING BUILDING SHALL BE MAINTAINED WEATHERTIGHT AND DUST-FREE THROUGHOUT THE DURATION OF THE PROJECT.
14. IF HAZARDOUS MATERIALS ARE UNCOVERED DURING DEMOLITION OR CONSTRUCTION NOTIFY THE ARCHITECT & THE CITY OF GLENDALE. HAZARDOUS MATERIALS WILL BE REMOVED BY CITY OF GLENDALE.

GLENDALE PUBLIC HOUSING - BATHROOM REMODEL

DESIGN ONE, INC.
MANI SUBRA, AIA, ARCHITECT
ARCHITECTS • PROJECT MANAGERS • CONST MANAGEMENT
16071 N 76TH STREET, SUITE #101 SCOTTSDALE, AZ 85260
(480) 860-8028 / FAX (480) 998-9507
Email. mail@designonearchitects.com

REGISTERED ARCHITECT
CERTIFICATE NO
21845
MANI
SUBRA
Date Signed 5/16/2014
ARIZONA, U.S.A.
Expires 1/31/2015

PROJECT #112009
SCALE: 1/2" = 1'-0"

A-2

GENERAL REMODELING NOTES:

1. CONTRACTOR WILL VERIFY ALL DIMENSIONS AND SITE CONDITIONS BEFORE BEGINNING WORK. ANY DISCREPANCIES SHALL BE BROUGHT IMMEDIATELY TO THE ATTENTION OF THE ARCHITECT IN WRITING BEFORE WORK BEGINS.

2. CAREFULLY EXAMINE THE CONSTRUCTION SITE TO DETERMINE THE EXTENT OF THE WORK AND THE EXISTING CONDITIONS. NO EXTRA PAYMENTS WILL BE ALLOWED FOR CLAIMS FOR ADDITIONAL WORK THAT COULD HAVE BEEN DETERMINED BY SUCH INSPECTION.

3. CHECK AND VERIFY DOCUMENTS AND FIELD CONDITIONS FOR ACCURACY, CONFIRMING THAT EXISTING CONDITIONS ARE AS DOCUMENTED BEFORE BEGINNING CONSTRUCTION. IF ANY QUESTIONS OR CONCERNS ARISE, THE CONTRACTOR IS RESPONSIBLE FOR OBTAINING CLARIFICATIONS FROM THE ARCHITECT BEFORE PROCEEDING.

4. ALL WORK SHALL BE PERFORMED BY SKILLED AND QUALIFIED WORKMEN FOLLOWING THE BEST AND ESTABLISHED PRACTICES OF THE TRADES INVOLVED USING PUBLISHED TRADE ASSOCIATION STANDARDS AND GUIDELINES.

5. THE GENERAL CONTRACTOR SHALL BE RESPONSIBLE FOR COORDINATING THE WORK BETWEEN THE TRADES AND FOR THE PROPER SCHEDULING OF WORK AND TRADES ON THE JOB.

6. ALL MATERIALS SHALL BE NEW, UNUSED, AND OF THE HIGHEST QUALITY IN EVERY RESPECT UNLESS OTHERWISE NOTED. MANUFACTURED MATERIALS AND EQUIPMENT SHALL BE INSTALLED PER MANUFACTURER'S RECOMMENDED INSTRUCTIONS.

7. ALL WORK SHALL BE PERFORMED BY THE GENERAL CONTRACTOR UNLESS OTHERWISE NOTED.

8. THE CONTRACTOR IS RESPONSIBLE FOR THE MEANS AND METHODS OF CONSTRUCTION. SAFETY PRECAUCTIONS ARE THE RESPONSIBILITY OF THE CONTRACTOR. LATEST ADOPTED GOVERNING CODES AND ORDINANCES SHALL APPLY.

9. THE CONTRACTOR IS RESPONSIBLE FOR MAINTAINING A CLEAN PROJECT, FREE FROM TRASH AND DEBRIS. FLOORS SHALL BE KEPT CLEAN AND SWEPT. ADJACENT WORK SHALL BE PROTECTED FROM ONGOING WORK, DAMAGE, OVERSPRAY, ETC. ALL FIXTURES, EQUIPMENT AND FINISHES SHALL BE LEFT CLEAN AND READY FOR OCCUPANCY. EXISTING WORK SHALL BE KEPT PROTECTED CONTRACTOR'S EXPENSE.

GLENDALE PUBLIC HOUSING - BATHROOM REMODEL

DESIGN ONE, INC.
MANI SUBRA, AIA, ARCHITECT
ARCHITECTS • PROJECT MANAGERS • CONST MANAGEMENT
16071 N 76TH STREET, SUITE #101 SCOTTSDALE, AZ 85260
(480) 860-8028 / FAX (480) 998-9507
Email mail@designonearchitects.com

REGISTERED ARCHITECT
CERTIFICATE NO. 21845
MANI SUBRA
Date Signed 5/6/2014
ARIZONA, U.S.A.
Expires 1/31/2015

PROJECT #11209
SCALE: 1/2" = 1'-0"

A-3

GENERAL REMODELING NOTES (CONT.):

10. THE CONTRACTOR SHALL PROVIDE AND INSTALL ALL EQUIPMENT AND/OR APPLIANCES SPECIFIED UNLESS OTHERWISE NOTED. OWNER SUPPLIED EQUIPMENT SHALL BE INSTALLED BY CONTRACTOR. CONTRACTOR SHALL VERIFY ALL ROUGH DIMENSIONS OF ALL EQUIPMENT BEFORE FABRICATION OF ANY ADJACENT WORK.
11. WHERE NEW WORK JOINS EXISTING WORK OR EXISTING WORK IS DISTURBED, THE CONTRACTOR SHALL FINISH ALL WORK TO MATCH EXISTING. NEW WORK SHALL LINE UP WITH AND MATCH EXISTING WORK EXCEPT WHERE OTHERWISE DIMENSIONED OR DETAILED.
12. VARIATIONS IN THE EXISTING WORK SHALL NOT RELIEVE THE CONTRACTOR OF PROVIDING ALL NEW WORK TO BE LEVEL, PLUMB AND STRAIGHT.
13. PROVIDE BLOCKING BEHIND ALL WALL MOUNTED DOOR STOPS, ACCESSORIES, MILLWORK, ETC., TO PROVIDE PROPER AND STRONG ATTACHMENT.
14. SUBMIT SHOP DRAWINGS ON ALL MILLWORK OR OTHER SPECIAL CONSTRUCTION FOR ARCHITECT'S BEFORE FABRICATION.
15. THE CONTRACTOR SHALL PROVIDE FOR CONTINUING OPERATION OF ALL SIGNS AS REQUIRED BY LOCAL CODES.
16. NOT USED
17. ALL CONTRACTORS SHALL COORDINATE THEIR WORK WITH THE MECHANICAL, PLUMBING, ELECTRICAL, AND GENERAL CONTRACTORS PRIOR TO AND DURING ALL PHASES OF CONSTRUCTION.
18. ALL WORK SHALL CONFORM TO THE IBC AS APPROVED BY THE CITY OF GLENDALE. SEE SHT. A-2
19. NOT USED
20. ALL OFF-SITE IMPROVEMENTS ARE EXISTING & TO REMAIN.

GLENDALE PUBLIC HOUSING - BATHROOM REMODEL

DESIGN ONE, INC.
MANI SUBRA, AIA, ARCHITECT
ARCHITECTS • PROJECT MANAGERS • CONST MANAGEMENT
16071 N 76TH STREET, SUITE #101 SCOTTSDALE, AZ 85260
(480) 860-8028 / FAX (480) 998-9507
Email mail@designonearchitects.com

REGISTERED ARCHITECT
CERTIFICATE NO
21845
MANI
SUBRA
Date Signed 5/6/2014
ARIZONA, U.S.A.
Expires 1/31/2015

PROJECT #11209
SCALE: 1/2" = 1'-0"

A-4

DEMOLITION KEYNOTES

1. REMOVE EXISTING WOOD UPPER CABINET KEEPING BACKING INTACT FOR REPLACEMENT CABINET
2. NOT USED
3. REMOVE EXISTING LIGHT, JB, OUTLET, WIRING & WIRE MOLD AND MEDICINE CABINET
4. REMOVE EXISTING WC WITHOUT DAMAGE TO FLOOR FITTING AND WATER SUPPLY
5. REMOVE EXISTING VANITY WITHOUT DAMAGE TO EXISTING MASONRY WALL, WASTE AND VENT PIPING.
6. REMOVE TUB, SHOWER SURROUND AND/OR CERAMIC TILES, WHICH MAY BE UNDERNEATH THE SURROUND AS OCCURS, WITHOUT DAMAGE TO MASONRY WALLS CALCULATE ½ AREA OF SURROUNDS FOR THE REMOVAL.
7. REMOVE SLIDING GLASS DOOR AND/OR FRAME AS OCCURS.
8. REMOVE RESILIENT FLOORING (TYP.) & PREPARE SUBSTRATE FOR NEW CERAMIC TILING.
9. NOT USED
10. EXISTING PLUMBING CHASE TO REMAIN
11. NOT USED
12. EXISTING 2X STUDS & EXISTING CMU WALLS TO REMAIN
13. REMOVE ANY GLUE OR TILE OFF EXISTING CMU WALLS WITHOUT DAMAGE TO THE BLOCK SURFACES AND PREP TO PAINT ABOVE 68" FROM FLOOR AND 28" FROM WALL.
14. EXISTING EXPOSED PAINTED CMU TO REMAIN UNDAMAGED
15. NOT USED
16. NOT USED
17. EXISTING PLUMBING CHASE TO REMAIN DO NOT DAMAGE EXISTING FINISH, FRAMING OR BLOCK
26. REMOVE EXIST. OBSCURED SLIDING GLASS WINDOW WITHOUT DAMAGE TO THE WALL MATERIAL AND FINISH
27. NOT USED

GLENDALE PUBLIC HOUSING - BATHROOM REMODEL

DESIGN ONE, INC.
MANI SUBRA, AIA, ARCHITECT
ARCHITECTS • PROJECT MANAGERS • CONST MANAGEMENT
16071 N 76TH STREET, SUITE #101 SCOTTSDALE, AZ 85260
(480) 860-8028 / FAX (480) 998-9507
Email mail@designonearchitects.com

REGISTERED ARCHITECT
CERTIFICATE NO
21845
MANI
SUBRA
Date Signed 5/6/2014
ARIZONA, U.S.A.
Expires 1/31/2015

PROJECT #11209
SCALE: 1/2" = 1'-0"

A-5

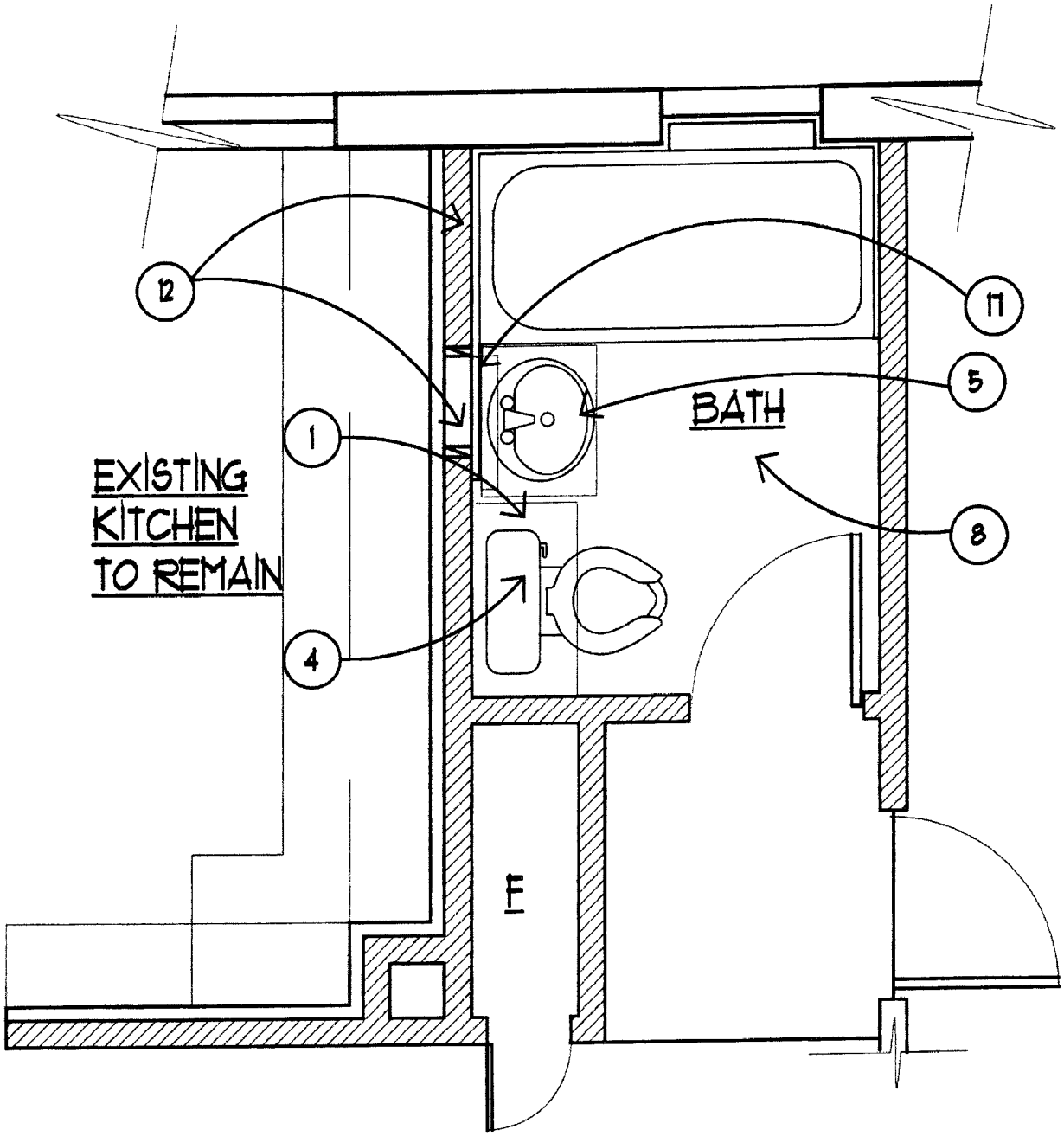

ENLARGED DEMOLITION FLOOR PLAN/SOME UNITS MAY BE OPPOSITE HAND

SEE KEY PLAN FOR BUILDING ORIENTATION

SCALE: 1/2" = 1'-0"

GLENDALE PUBLIC HOUSING - BATHROOM REMODEL

DESIGN ONE, INC.
MANI SUBRA, AIA, ARCHITECT
ARCHITECTS • PROJECT MANAGERS • CONST MANAGEMENT
16071 N 76TH STREET, SUITE #101 SCOTTSDALE, AZ 85260
(480) 860-8028 / FAX (480) 998-9507
Email mail@designonearchitects.com

REGISTERED ARCHITECT
CERTIFICATE NO. 21845
MANI SUBRA
Date Signed 5/6/2014
ARIZONA, U.S.A.
Expires 1/31/2015

PROJECT #11209
SCALE: 1/2" = 1'-0"

A-6

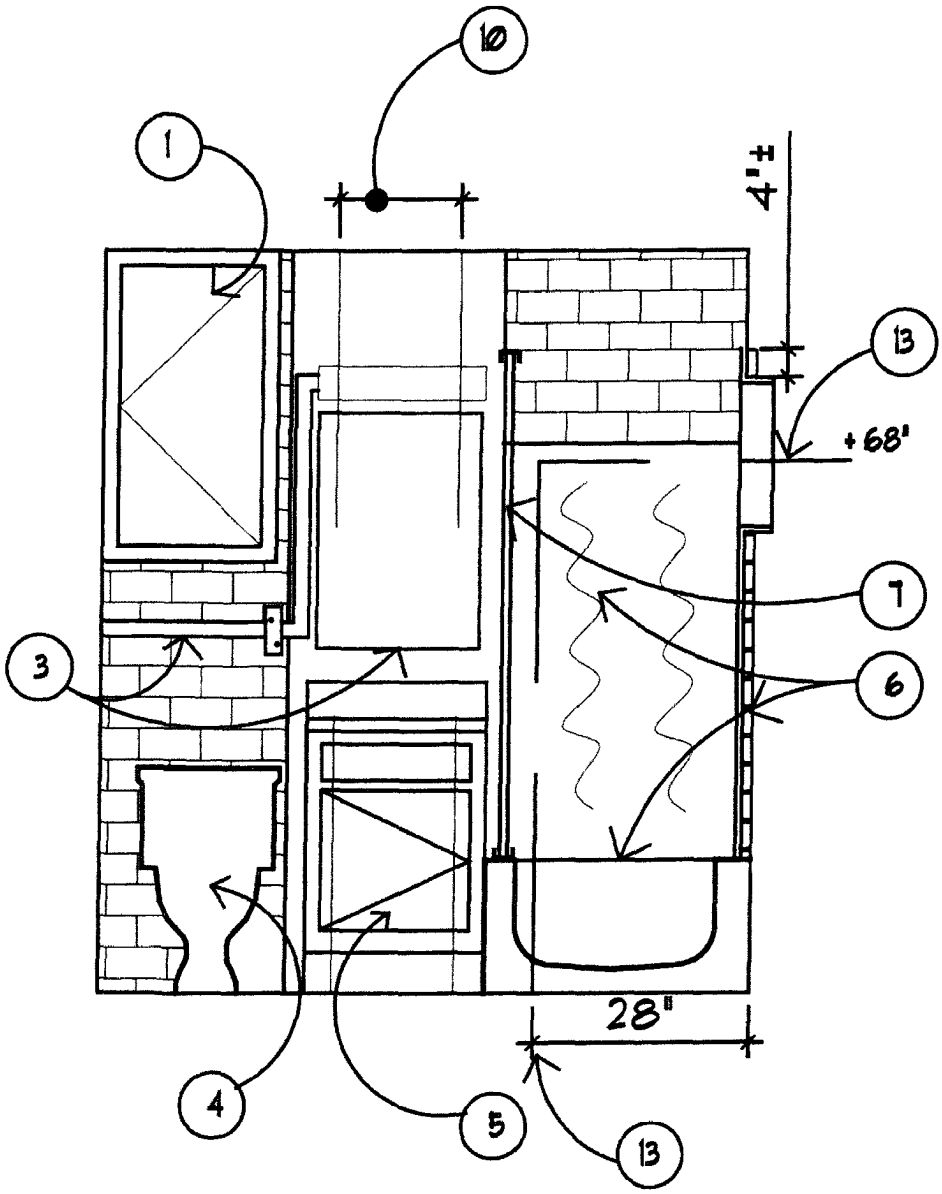

BATH DEMO ELEVATION

SCALE: 1/2" = 1'-0"

GLENDALE PUBLIC HOUSING - BATHROOM REMODEL

DESIGN ONE, INC.
MANI SUBRA, AIA, ARCHITECT
ARCHITECTS • PROJECT MANAGERS • CONST MANAGEMENT
16071 N 76TH STREET, SUITE #101 SCOTTSDALE, AZ 85260
(480) 860-8028 / FAX (480) 998-9507
Email mail@designonearchitects.com

REGISTERED ARCHITECT
CERTIFICATE NO 21845
MANI SUBRA
Date Signed 5/6/2014
ARIZONA, U.S.A.
Expires 1/31/2015

PROJECT #11209
SCALE: 1/2" = 1'-0"

A-1

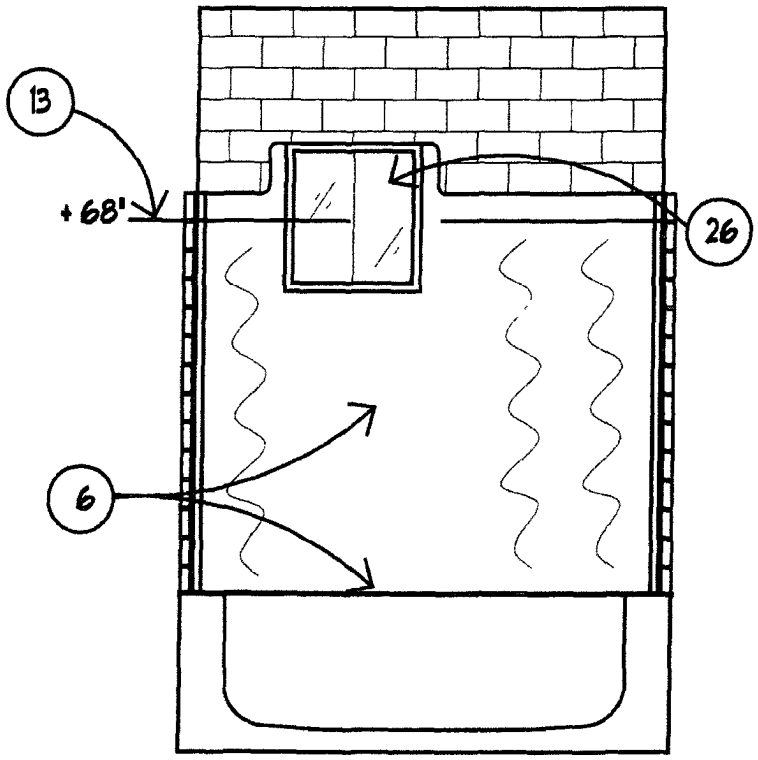

BATH DEMO ELEVATION

SCALE: 1/2" = 1'-0"

GLENDALE PUBLIC HOUSING - BATHROOM REMODEL

DESIGN ONE, INC.
MANI SUBRA, AIA, ARCHITECT
ARCHITECTS • PROJECT MANAGERS • CONST MANAGEMENT
16071 N 76TH STREET, SUITE #101 SCOTTSDALE, AZ 85260
(480) 860-8028 / FAX (480) 998-9507
Email mail@designonearchitects.com

REGISTERED ARCHITECT
CERTIFICATE NO. 21845
MANI SUBRA
Date Signed 5/16/2014
ARIZONA, U.S.A.
Expires: 1/31/2015

PROJECT #11209
SCALE: 1/2" = 1'-0"

A-8

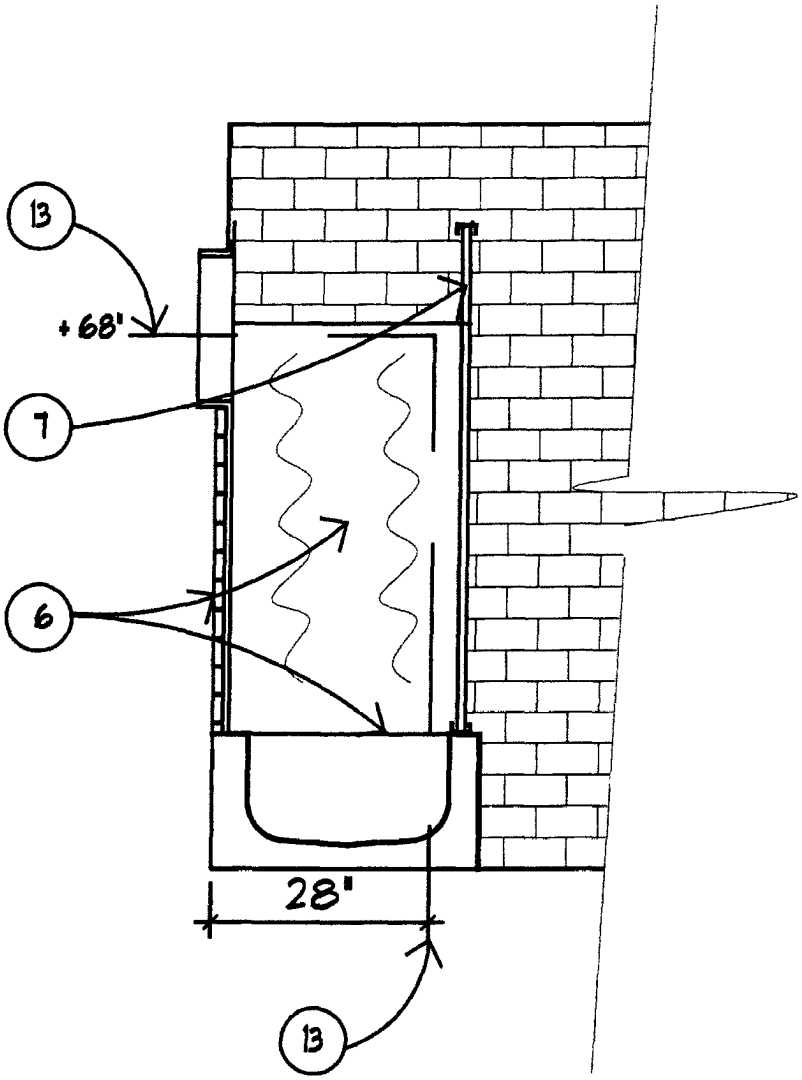

BATH DEMO ELEVATION

SCALE: 1/2" = 1'-0"

GLENDALE PUBLIC HOUSING - BATHROOM REMODEL

DESIGN ONE, INC.
MANI SUBRA, AIA, ARCHITECT
ARCHITECTS • PROJECT MANAGERS • CONST MANAGEMENT
16071 N 76TH STREET, SUITE #101 SCOTTSDALE, AZ 85260
(480) 860-8028 / FAX (480) 998-9507
Email mail@designonearchitects.com

REGISTERED ARCHITECT
CERTIFICATE NO. 21845
MANI SUBRA
Date Signed 5/6/2014
ARIZONA, U.S.A.
Expires: 1/31/2015

PROJECT #11209
SCALE: 1/2" = 1'-0"

A-9

REMODELING KEYNOTES

10. NOT USED
11. EXISTING ½" DRYWALL ON 2X2 FURRING @16" O.C. TO REMAIN
12. NOT USED
13. NEW SHOWER SURROUND PANELING, CURTAIN ROD AND CURTAIN
14. EXPOSED PAINTED CMU
15. SLOPE PANEL LINING WINDOW SILL TO DRAIN INTO SHOWER, WITH ½" LIP, TRIM AND SEAL CORNERS AND JOINTS WITH WINDOW FRAME AND MASONRY
16. INSTALL NEW WIRE MOLD AND WIRING TO GFCI OUTLET AND TO NEW LIGHTING FIXTURE
17. EXIST. PLUMBING CHASE TO REMAIN
18. NEW BATH TUB- USE NEW "P" TRAP TO MAKE CONNECTION TO EXIST. WASTE PIPING
19. NEW LAVATORY
20. NEW MEDICINE CABINET
21. NEW LIGHTING
22. NEW WATERCLOSET
23. NEW TOWEL BAR- SEE SPECS FOR LENGTH- SET AT 54"
24. INSTALL TEMPERED AND OBSCURED GLAZING MATCHING THE PATTERN OF THE EXISTING GLAZING
25. ALIGN GROUT JOINTS TO EXISTING FULL SIZE TILE LAYOUT, INSTALL WOOD BASE AT ALL WALLS ABOVE NEW TILES
26. NEW T.P. ROLL HOLDER
27. NEW CABINET MATCHING THOMASVILLE KITCHEN EXCEPT WHITE HIGH GLOSS ENAMEL PAINT
28. NOT USED
29. NOT USED

GLENDALE PUBLIC HOUSING - BATHROOM REMODEL

DESIGN ONE, INC.
MANI SUBRA, AIA, ARCHITECT
ARCHITECTS • PROJECT MANAGERS • CONST MANAGEMENT
16071 N 76TH STREET, SUITE #101 SCOTTSDALE, AZ 85260
(480) 860-8028 / FAX (480) 998-9507
Email mail@designonearchitects.com

REGISTERED ARCHITECT
CERTIFICATE NO
21845
MANI
SUBRA
Date Signed 5/6/2010
ARIZONA, U.S.A.
Expires: 1/31/2015

PROJECT #112009
SCALE: 1/2" = 1'-0"

A-10

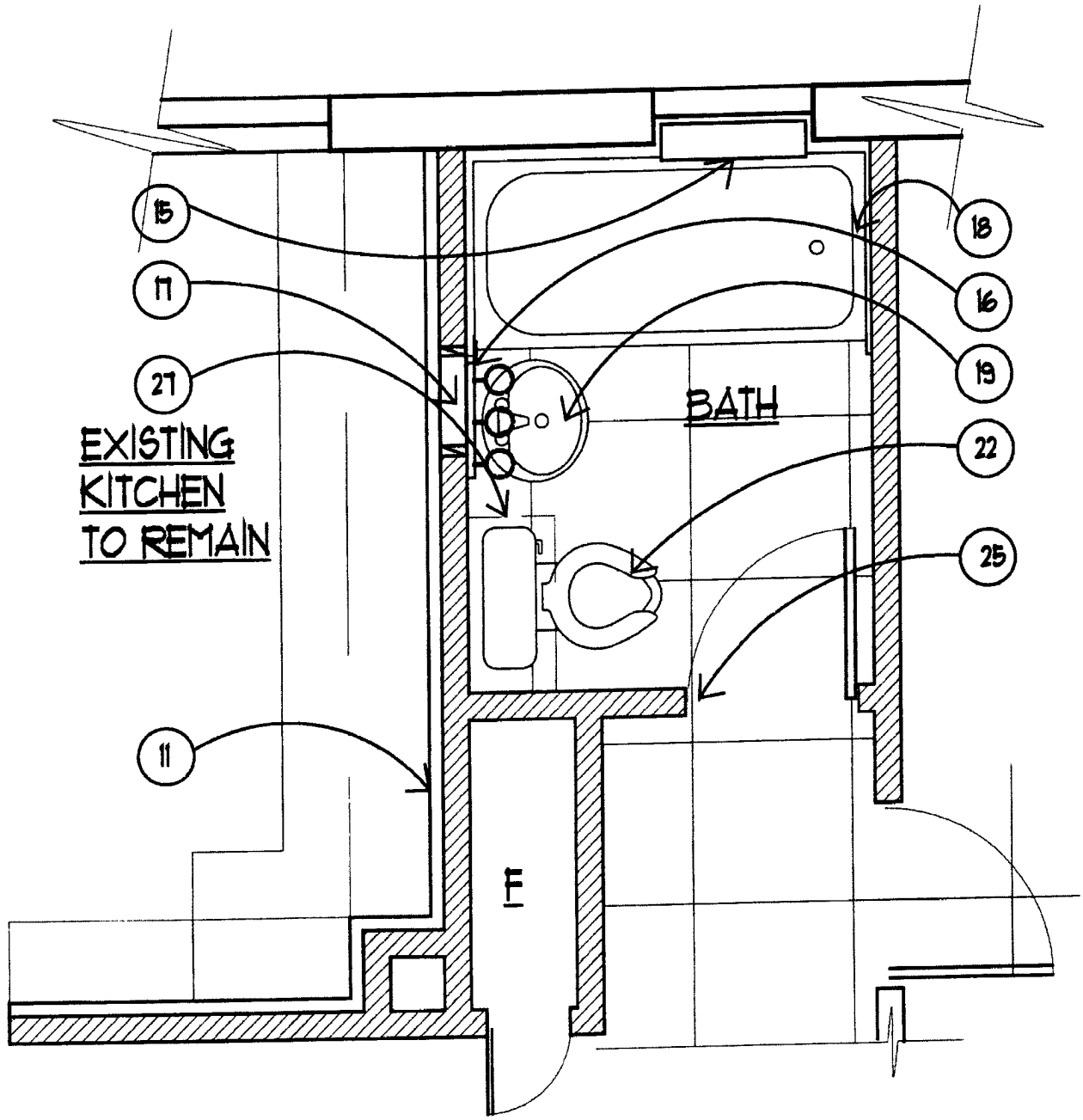

ENLARGED REMODELED FLOOR PLAN/SOME UNITS MAY BE OPPOSITE HAND

SEE KEY PLAN FOR BUILDING ORIENTATION

SCALE: 1/2" = 1'-0"

GLENDALE PUBLIC HOUSING - BATHROOM REMODEL

DESIGN ONE, INC.
MANI SUBRA, AIA, ARCHITECT
ARCHITECTS • PROJECT MANAGERS • CONST MANAGEMENT
16071 N 76TH STREET, SUITE #101 SCOTTSDALE, AZ 85260
(480) 860-8028 / FAX (480) 998-9507
Email mail@designonearchitects.com

REGISTERED ARCHITECT
CERTIFICATE NO
21845
MANI
SUBRA
Date Signed 5/6/2014
ARIZONA, U.S.A.
Expires 1/31/2015

PROJECT #11209
SCALE: 1/2" = 1'-0"

A = 11

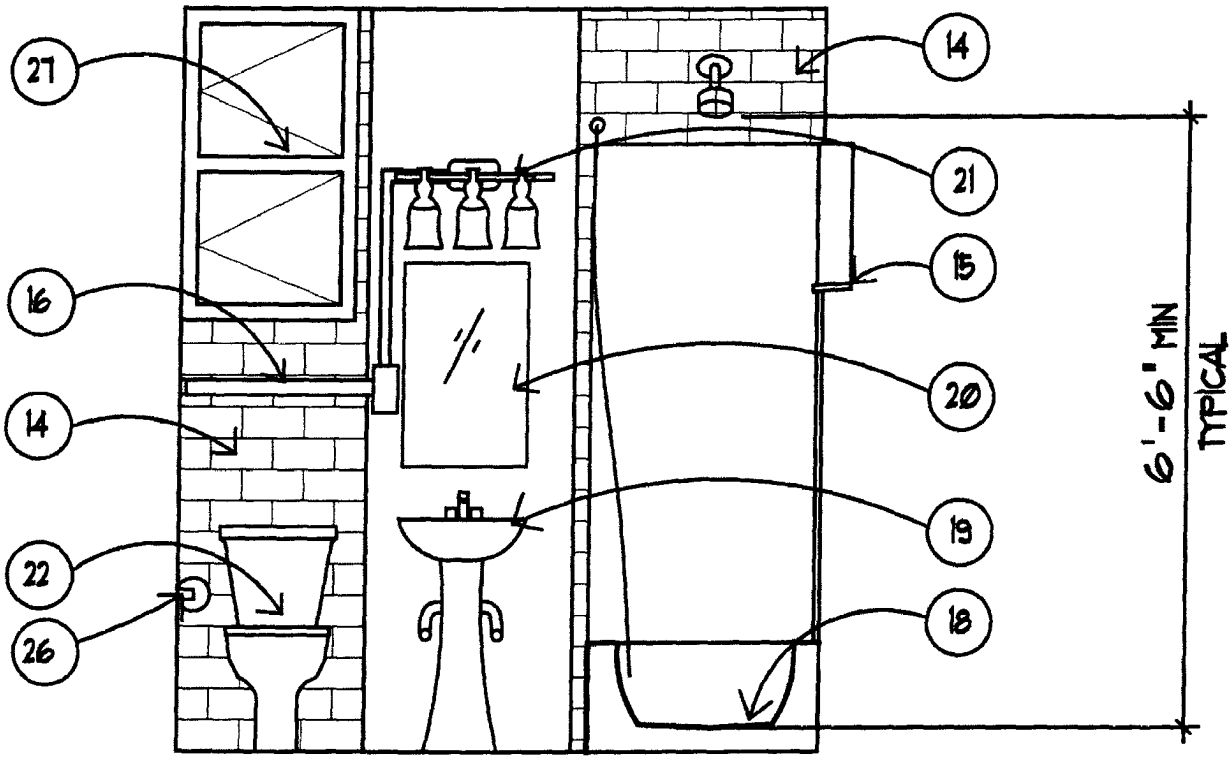

REMODELED BATH ELEVATION

SCALE: 1/2" = 1'-0"

GLENDALE PUBLIC HOUSING - BATHROOM REMODEL

DESIGN ONE, INC.
MANI SUBRA, AIA, ARCHITECT
ARCHITECTS • PROJECT MANAGERS • CONST MANAGEMENT
16071 N 76TH STREET, SUITE #101 SCOTTSDALE, AZ 85260
(480) 860-8028 / FAX (480) 998-9507
Email. mail@designonearchitects.com

REGISTERED ARCHITECT
CERTIFICATE NO
21845
MANI
SUBRA
Date Signed 5/6/2014
ARIZONA, U.S.A.
Expires 1/31/2015

PROJECT #11209
SCALE: 1/2" = 1'-0"

A-12

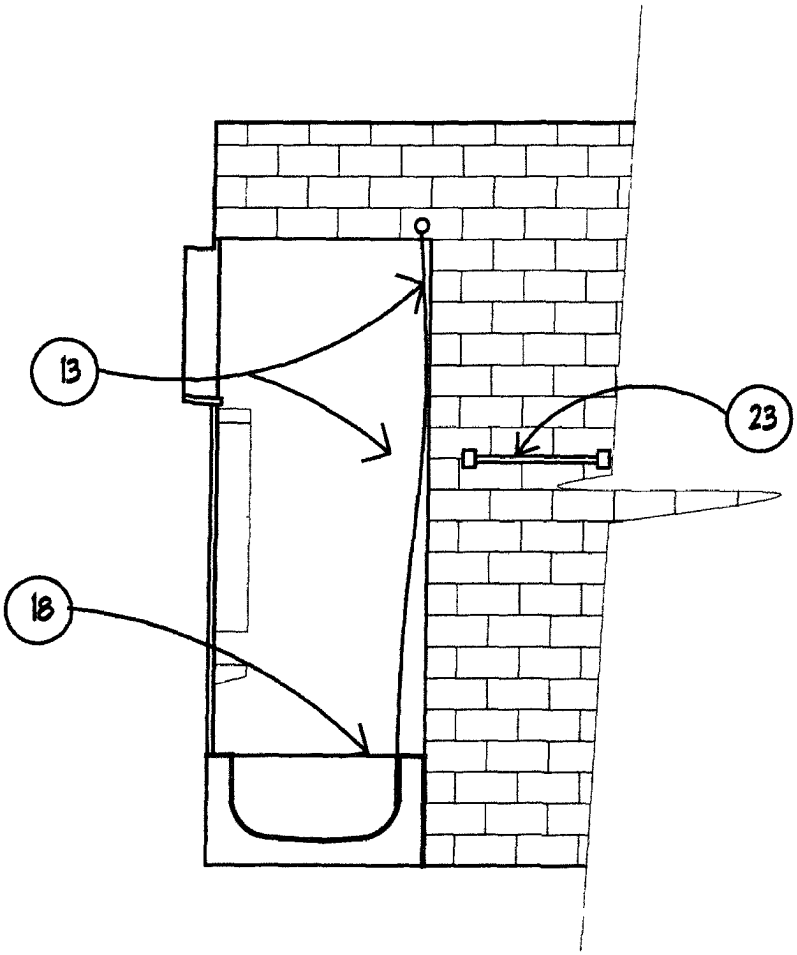

REMODELED BATH ELEVATION

SCALE: 1/2" = 1'-0"

GLENDALE PUBLIC HOUSING - BATHROOM REMODEL

DESIGN ONE, INC.
MANI SUBRA, AIA, ARCHITECT
ARCHITECTS • PROJECT MANAGERS • CONST MANAGEMENT
16071 N. 76TH STREET, SUITE #101 SCOTTSDALE, AZ 85260
(480) 860-8028 / FAX (480) 998-9507
Email mail@designonearchitects.com

REGISTERED ARCHITECT
CERTIFICATE NO
21845
MANI
SUBRA
Date Signed 5/6/2014
ARIZONA, U.S.A.
Expires 1/31/2015

PROJECT #11209
SCALE: 1/2" = 1'-0"

A-13

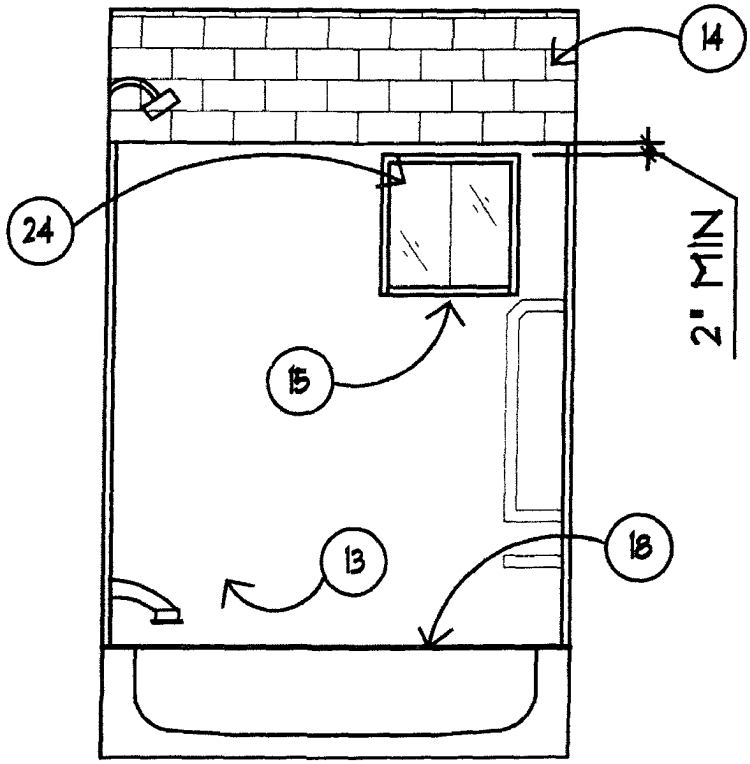

REMODELED BATH ELEVATION

SCALE: 1/2" = 1'-0"

GLENDALE PUBLIC HOUSING - BATHROOM REMODEL

DESIGN ONE, INC.
MANI SUBRA, AIA, ARCHITECT
ARCHITECTS • PROJECT MANAGERS • CONST MANAGEMENT
16071 N 76TH STREET, SUITE #101 SCOTTSDALE, AZ 85260
(480) 860-8028 / FAX (480) 998-9507
Email mail@designonearchitects.com

REGISTERED ARCHITECT
CERTIFICATE NO
21845
MANI
SUBRA
Date Signed 5/6/2014
ARIZONA, U.S.A.
Expires 1/31/2015

PROJECT #11209
SCALE: 1/2" = 1'-0"

A-14

SECTION 01 10 00 - SUMMARY

PART 1 - GENERAL

1 01 PROJECT INFORMATION

A Project Information
1 Name GLENDALE PUBLIC HOUSING
BATHROOM REMODEL – Phase 2
2 Location 6842 N 61 Ave , Glendale, AZ 85301

1 02 PROJECT SCOPE OF WORK

A BATHROOM TENANT IMPROVEMENTS TO RESIDENTIAL UNITS· Which includes, but is not limited to, the following

B. Provide all Work, related to the replacement of the bathroom fixtures windows and finishes with new construction, including tiling of the bathroom floors and repair of minor related demolition work to accommodate new work and finishes Provide all Architectural, Plumbing, Mechanical, and Electrical work as required for a fully complete and operational remodeled facility and as shown in the Drawings and in these Specifications, herein after known as the Construction Documents

C Completion of Work 4 (Four) calendar months

D Owner approval in writing must be obtained for all potential changes in Contract Amount or Contract Time or prior to commencement of the Work included in the potential changes

E All Work indicated on the Drawings and specified in this Project Manual and as required to produce a complete and functional Project

1 03 CONTRACTOR'S RESPONSIBILITIES

A Direct all communication to City Project Manager in writing

B Receive clarification from Architect and/or City Project Manager in form of written Architect's Supplementary Instructions

C Submittal of Preliminary Project Schedule from Contractor within Ten (10) working days (two calendar weeks) following Notice to Proceed

D. Submit list of all required submittals by Specification number to Architect and/or City Project Manager within Ten (10) working days from date of Notice to Proceed Contractor shall check and verify that all submittals meet the requirements of the Specifications and Drawings before placing Contractor's stamp on submittals and forwarding these submittals to the Architect's office

E Transmit, deliver and pick-up all submittals to Architect and/or City Project Manager's office

F Notify City Project Manager, with minimum of 48 hours prior notice, for requested special observation other than regular visit

G Notify Architect and Owner for required special inspections, and other items for verification and inspection

H The Contractor shall be responsible for the quality of all subcontractors, material and workmanship on this project Responsibility to correct any inferior quality of work is borne by the Contractor, not by the Architect, City of Glendale Representative, Inspector and/or Project Manager

I Prepare close-out materials and Punch Lists Substantial Completion and Final Punch Lists shall be prepared by Contractor Architect will conduct Substantial Completion, Semi-Final and Final Inspections

J It is required that Contractor photograph, video tape, or otherwise document existing conditions prior to commencing Work

1 04 ARCHITECT'S RESPONSIBILITIES

A Review submittals (Shop Drawings)
1 Allow Seven (7) working days (Monday through Friday) for review of any submittal for review solely by the Architect
2 Allow Eight (8) working days (Monday through Friday) for review of any submittal requiring additional review by Architect's consultant(s)
3 For materials requiring color selection Products will be reviewed immediately Colors will be selected when all materials have been submitted and reviewed with the Owner

B Keep Owner informed Contractor to keep Architect informed of any communication breakdowns
1 Provide clarification to Contractor and Owner
2 Visit Project Site periodically Attend Progress Meetings as scheduled with Contractor, Owner, and Architect's representatives in attendance
3 Observe Work for conformance with these Drawings, Specifications and applicable codes

C Conduct Substantial Completion, Semi-Final and Final Inspections Distribute Punch List to Contractor and Owner

1 05 OWNER'S RESPOSIBILITIES

A Owner-Furnished – Contractor Installed Work Owner supplied ceramic tile
1 Arrange and pay for Owner Furnished items and products to be delivered in a timely manner to project Site
2 On delivery, inspect Owner Furnished items and products jointly with Contractor
3 Submit claims for transportation damage and replace damaged, defective, or deficient items

B 1 Windows (Include 1 2 & 3)

1 06 DOCUMENTS

A Architect
1 Architect's Supplemental Instructions (ASI) No cost nor time implication
2 Proposal Request (PR). May have cost and/or time implications Do not proceed without Owner's written directions pertaining to subject Proposal Requests
3 Construction Change Directive (CCD)
4 Change Order (CO)
5 Reports

a Field Reports from Architect
b Consultant's Field Reports to Architect

B Contractor
1 Issue Request for Information (RFI) whenever clarification of Document intent or conflict is required
2 Respond to Architect's ASI or PR Document, document any change in cost or time to Contract
3 Change Orders Provide breakdown of labor (hours) and materials (unit cost), include subcontractor quotes if applicable Contractor shall provide Architect with complete breakdown for labor and material
4 Payment Application Review (Rough Copy and Record Drawings) at Project Site on approximately the 25th of the Month, prepare final copy and send to Architect no later than the 30th, Architect will review and send to Owner within Seven (7) working days of receiving Pay Application, and Owner will process payment within 15 working days of receipt of Pay Application from Architect
5 Retention Ten Percent (10%) will be held back until Project is Fifty Percent (50%) complete If satisfactory progress is being made, Project Retention may be reduced to Five (5%)
6 Record Drawings (used for no other purpose) To be maintained at field office by Contractor and reviewed by the Architect when reviewing the Pay Application Maintain record changes as the Project progresses
7 Shop Drawings
a Material Substitution Do not submit materials that have not been approved
b Submittal Procedure Architect will retain Two (2) copies of every submittal Contractor shall submit copies of shop drawings and schedules for parts of work as specified herein and as required for the Work
c Cover sheet as supplied by Architect to accompany all Shop Drawings and other submittals Contractor shall review drawings to verify compliance with these Specifications and Drawings and stamp each submittal prior to submission

1 07 SUBSTANTIAL/FINAL COMPLETION

A The Contractor shall give the City Project Manager a written request to inspect for Substantial Completion (SC), and include a Punch List of items to be completed or corrected prior to Final Inspection

B The City Project Manager will set the time for SC inspection and so notify the Contractor within Seven (7) working days of receiving the Contractor's request

C The Contractor shall deliver the following to the City Project Manager in sufficient time, minimum of seven (7) working days for the Architect to review them prior to the SC inspection
1 Warranties
2 Operating Manuals
3 Project Record Drawings and Project Record Specifications
4 Keying Transfers
5 Required addresses and contact information
6 Extra Materials (Maintenance stock)
7 Note that As-Builts and Project Close-Out checklist are submitted just prior to Final Completion

D The Architect and City Project Manager will make the SC inspection and issue the Contractor a list of items not in accordance with the Contract

1 If Substantial Completion is not achieved, the Contractor shall promptly correct all non-conforming items and request another SC inspection, at no additional cost to the Owner
2 When the Architect determines the Work is substantially complete, the Architect will prepare a Certificate of Substantial Completion The Certificate of Substantial Completion shall describe and establish the responsibilities of the Contractor for security, maintenance, utilities, insurance and damage to the Work, and list any non-conforming items remaining

E When all requirements for SC are met, and the Contractor has satisfied the SC "Final Punch List" the Contractor shall
1 Notify the City Project Manager that the Work is ready for Final Inspection and Acceptance
2 Submit the Final Pay Application (AIA Document G707), Affidavit of Payment of Debts and Claims (G706), Affidavit of Release of Liens (G706 A) and Consent of Surety (G707)

1 08 PROJECT SPECIFIC

A Project Meetings are to be held weekly Time and day of week to be determined

B Contractor's Construction Area Within the designated area, show on Construction Site Plan, location for the following
1 Construction required fencing, if any
2 Construction equipment, field office, storage areas, storage facilities.
3 Parking for construction personnel and construction vehicles
4 Access to Site – Hours of Operation Contractor to verify Site access with Owner for off-hour work and work on Saturdays and Sundays, though due to the residential nature of the Site, access to work beyond normal working hours will be denied unless exceptional conditions reasons exist for the extension of the normal hours of operation

C Utilities Also see Section 015000 "Temporary Facilities and Controls" for additional requirements
1 Use of Existing Utilities Contractor to provide water, power, gas (LP) for heat, and telephone for construction use Owner's existing utilities are not available for construction use and shall not be used for any construction purpose
2 Interruptions of Provide minimum of 48 hours prior notification to Owner and Architect for any interruptions to Owner's existing utility services
3. Electrical utility company maintains energized aerial electrical power lines in immediate vicinity of this Project Do not consider these lines as insulated Construction personnel working near these lines are exposed to an extreme hazard from electrical shock Contractors, their employees, and all other construction personnel working on this Project must be warned of danger and instructed to take adequate protective measures, including maintaining minimum of 10 feet clearance between these power lines and construction equipment and personnel See OSHA Standard 1926.550(A) 15

D Sanitary Controls Contractor shall provide portable toilet facilities and cool drinking water for the use of all construction personnel Maintain in good working order and in sanitary condition

E Provide waste dumpsters as required to meet Project requirements

F *Environmental Controls*· Contractor shall clean Project Site daily Comply with requirements of all regulatory agencies Be aware of sensitivities of adjacent property Owners Avoid noise, dust, debris, traffic which might be bothersome

G Access to existing operating Glendale Housing buildings on the Site is limited to City of Glendale personnel and tenants only Contractor and all construction personnel shall not enter or loiter around City of Glendale housing facilities

1. City of Glendale tenants will occupy site and existing adjacent building(s) during entire construction period Cooperate with Owner and City of Glendale tenants during construction operations to minimize conflicts and facilitate tenants usage Perform the Work so as not to interfere with tenant's day-to-day operations Maintain existing required exits, no exceptions

H Protection of Life and Property Contractor is responsible for construction processes and procedures

I Deportment and Appearance of Personnel Contractor shall be responsible for conduct of staff The following items are forbidden on this Project Site
1 Alcohol, in sealed or in open containers
2 Radios or "boom boxes" or other music producing devices that can be heard by others
3 Tobacco The entire Project is a smoke free area No tobacco use in City buildings
4 Weapons
5 Inappropriate language
6 Any violations will result in the immediate removal of the individuals involved

J Make no comments to any public media without first acquiring City of Glendale's Project Manager's written approval

K Demolition items to be disposed of upon approval of the owner or delivered to Owner to be stored as directed Protection of existing, note any items that are damaged, record condition prior to commencing Work

L. Contractor to locate all existing utilities prior to commencing Work.

M Project Close Out Architect will perform Substantial Completion inspection, Semi-Final inspection and Final Inspection Retention will be paid at Final Completion All training operations and Maintenance Manuals shall be submitted prior to Substantial Completion

N Two-Year Guarantee Date of Substantial completion shall become the date of commencement of the Two-Year Guarantee Period, provided, however, that those items of work specified as having longer guarantees or warrantees shall be guaranteed or warranted for the period specified. An eleventh month warranty inspection will be held

PART 2 - PRODUCTS (Not Used)

PART 3 - EXECUTION (Not Used)

End of Section 01 10 00

SECTION 02 01 00 – MAINTENANCE OF EXISTING CONDITIONS

PART 1 - GENERAL

1 01 SUMMARY

A Includes the protection and maintenance of existing conditions of existing adjacent structures and protection and maintenance of selected portions within the designated buildings

1 02 SUBMITTALS

A Preconstruction Photographs or Videotapes Show existing conditions of adjoining construction and site improvements, including finish surfaces that might be misconstrued as damage caused by Work of this Project Submit before Work begins

1 03 FIELD CONDITIONS

A Owner's Tenants will occupy buildings immediately adjacent to selective demolition area Comply with requirements specified in Section 01 10 00 "Summary."

B Conditions existing at time of inspection for bidding purpose will be maintained by Owner as far as practical Notify Architect of discrepancies between existing conditions and Drawings before proceeding with selective demolition and Work of this Project.

C Utility Service Maintain existing utilities indicated to remain in service and protect them against damage during selective demolition operations Maintain fire-protection facilities in service during selective demolition operations

PART 2 - PRODUCTS

2 01 MATERIALS

A Provide for replacement of Work removed. Comply with Contract Documents for type of Work standards and Specification requirements for each specific product involved

PART 3 - EXECUTION

3 01 EXAMINATION

A Survey existing conditions of Work, including elements subject to movement or damage during selective demolition, cutting and patching, and installation of new work, and correlate with requirements indicated
1 Record existing conditions with measured drawings and preconstruction photographs
2 Perform surveys as Work progresses to detect hazards resulting from Project activities
3 After uncovering Work, inspect conditions affecting installation of new products and verify procedures with Architect
4 Report unsatisfactory or questionable conditions in writing to Architect Do not proceed with

Work until further instructions are received

3 02 UTILITY SERVICES AND MECHANICAL/ELECTRICAL SYSTEMS

A Existing Utility Services/Systems Maintain services and systems indicated to remain and protect them against damage during construction, selective demolition and cutting and patching operations Comply with requirements specified in Section 01 10 00 "Summary" for existing utility service or system interruptions

B Notify affected utility companies before starting work and comply with their requirements
1 Mark location of utilities
2 Identify, disconnect, remove and cap designated utilities within designated demolition areas

C. When unanticipated mechanical, electrical, or structural elements that conflict with intended function or design are encountered, investigate and measure nature and extent of conflict Promptly submit written report to Architect

3 03 PREPARATION

A Site Access and Temporary Controls Ensure minimum interference with roads, streets, walks, walkways, and other adjacent occupied and used facilities
1 Obtain written permission from adjacent property owners when demolition equipment will traverse, infringe upon or limit access to their property
2 Comply with requirements specified in Section 01 40 00 "Temporary Facilities and Controls" for access and protection

B Provide devices and methods to protect other portions of Work from damage, including elements which may be exposed by Selective Demolition, or cutting and patching Work.

C. Provide, erect, and maintain temporary barriers and security devices where required and as indicated on Drawings. Maintain excavations free from water

D Protect existing landscaping materials, appurtenances, and structures which are not to be demolished

E Protect bench marks and existing work from damage or displacement.

F Prevent movement or settlement of adjacent structures

G Protection of existing buildings with tenants
1 Maintain all required exits per applicable City of Glendale approved codes Do not block or restrict access and use of these exits during the Work of this Project
2 Provide protection to ensure safe passage of people around selective demolition area and to and from occupied portions of building

H Temporary Facilities Provide temporary barricades and other protection required to prevent injury to people and damage to adjacent buildings and facilities to remain
1 Provide temporary weather protection, during interval between selective demolition of existing construction and new construction, to prevent water leakage and damage to structure and interior areas Provide weatherproof closures for exterior openings resulting from Work of this Project
2 Protect walls, ceilings, roofs, floors, and other existing finish work that are to remain or that may be exposed during Selective Demolition or cutting and patching operations

3 Cover and protect finishes and equipment from soilage or damage when Selective Demolition work is performed in areas where such finishes and equipment are indicated to remain Should existing work be damaged during the course of the Selective Demolition or during construction, repair damaged finishes and equipment to new condition, to be indistinguishable from existing work identified to remain

I Dustproof Partitions
1 Erect and maintain dust-proof closures as required to prevent spread of dust or fumes to adjacent occupied areas
2 On completion, remove partitions and repair damage surfaces to match adjacent surfaces

3 04 PROTECTION OF EXISTING CONDITIONS

A Remove existing construction only to the extent required by new construction and as indicated Do not demolish building elements beyond what is indicated on Drawings without Architect's approval. Use methods required to complete the Work within limitations of governing regulations

B Existing Items to Remain Protect construction indicated to remain against damage and soiling during Selective Demolition When permitted by Architect, items may be removed to a suitable, protected storage location during selective demolition and cleaned and reinstalled in their original locations after selective demolition operations are complete

C Performance
1 Execute fitting and adjustment of products to provide finished installation
2 Comply with and match specified tolerances and finishes
3 Execute cutting and demolition work using methods which prevent damage to other Work and use qualified installers knowledgeable and trained to perform selective demolition, cutting and patching for
a Weather-exposed surfaces and moisture-resistant
b Sight-exposed finished surfaces
4 Provide proper surfaces to receive installation of repairs and new Work

D Execute fitting and adjustment of products to provide a finished installation to comply with specified products, functions, tolerances and finishes as shown on Drawings and as specified

E Fit Work airtight to pipes, sleeves, ducts, conduit and other penetrations through surfaces

F Restore Work which has been cut or removed Install new products to provide completed Work in accordance with requirements of Contract Documents and as required matching and blending with existing adjacent finishes, surrounding areas and surfaces

G Refinish entire surfaces as necessary to provide an even, matching finish as follows
1 Painted Walls or Ceilings To nearest intersection with another finish or corner
2 Where Applied Finishes Occur (i e wall base trim) To nearest intersection of finish without damage to adjacent material Where match of pattern, grain, texture, or similar finish cannot be made, refinish all applied finishes in room or area
3 Manufactured or Shop Fabricated Materials Replace entire affected surface or material

End of Section 02 01 00

SECTION 02 41 19 - SELECTIVE DEMOLITION

PART 1 - GENERAL

1 01 SUMMARY

A Includes the selective demolition and removal of selected portions within the designated buildings

1 02 DEFINITIONS

A Remove Detach items from existing construction and legally dispose of them off-site, unless indicated to be removed and salvaged or removed and reinstalled.

B Existing to Remain Existing items of construction that are not to be removed and that are not otherwise indicated to be removed, removed and salvaged, or removed and reinstalled

1 03 SUBMITTALS

A Schedule of Selective Demolition Activities Indicate the following
1 Detailed sequence of selective demolition and removal work, with starting and ending dates for each activity. Ensure Owner's on-site operations are uninterrupted
2 Interruption of utility services Indicate how long utility services will be interrupted
3 Coordination for shutoff, capping, and continuation of utility services
4 Locations of proposed dust- and noise-control temporary partitions and means of egress
5 Coordination of Owner's verification that subject buildings will be vacant during the life of the construction operations in subject buildings
6 Means of protection for items to remain and items in path of waste removal from building

B Pre-demolition Photographs or Videotapes Show existing conditions of adjoining construction and site improvements, including finish surfaces that might be misconstrued as damage caused by selective demolition operations. Submit before Work begins

C Landfill Records Indicate receipt and acceptance of hazardous wastes by a landfill facility licensed to accept hazardous wastes

D After Selective Demolition is complete, submit inventory list of items removed and salvaged

1 04 QUALITY ASSURANCE

A Demolition Firm Qualifications An experienced firm that has specialized in demolition work similar in material and extent to that indicated for this Project

B Regulatory Requirements
1 Comply with governing EPA and ADEQ notification regulations before beginning selective demolition Comply with hauling and disposal regulations of authorities having jurisdiction
2 Standards Comply with ANSI A10 6 and NFPA 241

1 05 FIELD CONDITIONS

A Owner's Tenants will occupy buildings immediately adjacent to selective demolition area. Conduct selective demolition so Owner's and Tenant's operations will not be disrupted Comply with requirements specified in Section 01 10 00 "Summary "

B Conditions existing at time of inspection for bidding purpose will be maintained by Owner as far as practicable Notify Architect of discrepancies between existing conditions and Drawings before proceeding with selective demolition

C Hazardous Materials It is not expected that hazardous materials will be encountered in the Work If materials suspected of containing hazardous materials are encountered, do not disturb, immediately notify Architect and City of Glendale Project Representative City of Glendale will test suspected materials, and remove hazardous materials under separate contract

D Storage or sale of removed items or materials on-site is not permitted

E Utility Service. Maintain existing utilities indicated to remain in service and protect them against damage during selective demolition operations Maintain fire-protection facilities in service during selective demolition operations

PART 2 - PRODUCTS (Not Used)

PART 3 - EXECUTION

3 01 EXAMINATION

A Verify that utilities serving only the designated unit scheduled for Work of this Project have been disconnected and capped as needed before proceeding with selective demolition

B Survey existing conditions and correlate with requirements indicated to determine extent of selective demolition required

C When unanticipated mechanical, electrical, or structural elements conflict with intended function or design are encountered, investigate and measure the nature and extent of conflict Promptly submit a written report to Architect
1 Engage a professional engineer to survey condition of building to determine whether removing any element might result in structural deficiency or unplanned collapse of any portion of structure or adjacent structures during selective demolition operations

D Perform surveys as the Work progresses to detect hazards resulting from selective demolition activities

3 02 UTILITY SERVICES AND MECHANICAL/ELECTRICAL SYSTEMS

A Existing Services/Systems Maintain services/systems indicated to remain and protect them against damage during selective demolition operations Comply with requirements specified in Section 01 10 00 "Summary" and Section 02 01 00 "Maintenance of Existing Conditions" for existing services/systems interruptions

3 03 PREPARATION

A Site Access and Temporary Controls Conduct selective demolition and debris-removal operations to ensure minimum interference with roads, streets, walks, walkways, and other adjacent occupied and used facilities Comply with requirements specified in Section 01 40 00 "Temporary Facilities and Controls" for access and protection

B Temporary Shoring Provide and maintain shoring, bracing, and structural supports as required to preserve stability and prevent movement, settlement, or collapse of construction and finishes to remain, and to prevent unexpected or uncontrolled movement or collapse of construction being demolished Strengthen or add new supports when required during progress of Selective Demolition

3 04 SELECTIVE DEMOLITION, GENERAL

A Remove items designated for demolition within limits of work indicated and as required to perform Work Do not remove anything beyond limits of demolition indicated without prior written approval of Architect If in doubt whether to remove an item, obtain written approval before proceeding

B If unanticipated mechanical, electrical, or structural elements conflict with intended function or design are encountered, investigate and measure both nature and extent of conflict Submit written report to Architect, accurate detail Pending receipt of written directive from Architect, rearrange Selective Demolition schedule as necessary to continue overall job progress without undue delay

C Bypass utility services such as pipe or conduit, before cutting, where services are shown or required to be removed, relocated or abandoned Cut-off pipe or conduit in walls or partitions to be removed Cap, valve or plug and seal remaining portion of pipe or conduit to prevent entrance of moisture or other foreign matter after by-passing and cutting

D Existing Items to Remain Protect construction indicated to remain against damage and soiling during Selective Demolition When permitted by Architect, items may be removed to suitable, protected storage location during Selective Demolition and cleaned and reinstalled in their original locations after Selective Demolition operations are complete

E. Use methods required to complete the Work within limitations of governing regulations and as follows
   1 Proceed with selective demolition systematically, top to bottom, layer by layer
   2 Neatly cut openings and holes plumb, square and true to dimensions required Use cutting methods least likely to damage construction to remain or adjoining construction Use hand tools or small power tools designed for sawing or grinding not hammering and chopping to minimize disturbance of adjacent surfaces Temporarily cover openings to remain
   3 Cut or drill from the exposed or finished side into concealed surfaces to avoid marring existing finished surfaces
   4 Do not use cutting torches until work area is cleared of flammable materials At concealed spaces, such as pipe and duct interiors, verify condition and contents of hidden space before starting flame-cutting operations.
      a Maintain fire watch and keep portable fire-suppression devices within reach during flame cutting operations
      b Maintain adequate ventilation when using cutting torches
   5 Remove decayed, vermin-infested, or otherwise dangerous or unsuitable materials and promptly dispose of off-site
   6 Provide adequate temporary structural support should demolition work impose excessive loads on supporting walls, floors or framing

7 Dispose of demolished items and materials promptly
8 Remove structural framing members and lower to ground by method suitable to avoid free fall and to prevent ground impact or dust generation
9 Locate Selective Demolition equipment and remove debris and materials so as not to impose excessive loads on supporting walls, floors, or framing

3 05 SELECTIVE DEMOLITION PROCEDURES FOR SPECIFIC MATERIALS

A Concrete Demolish in small sections Cut concrete to a depth of at least 3/4 inch (19 mm) at junctures with construction to remain, using power-driven saw Dislodge concrete from reinforcement at perimeter of areas being demolished, cut reinforcement, and then remove remainder of concrete indicated for selective demolition Neatly trim openings to dimensions indicated

B Masonry Demolish in small sections Cut masonry at junctures with construction to remain, using power-driven saw, then remove masonry between saw cuts

C Concrete Slab-on-Grade Saw-cut perimeter of area to be demolished, then break up and remove

D Cabinets, bathtub and bathtub surround Demolish in manner that maintains existing substrate intact and ready for new work Remove as little substrate and supporting construction as needed to free items for removal. Repair and restore substrates and supporting construction as needed at no additional cost to the Owner

E Resilient Floor Coverings Remove floor coverings and adhesive according to recommendations in RFCI-WP and its Addendum
1 Remove residual adhesive and prepare substrate for new floor coverings by one of the methods recommended by RFCI
2 Avoid creating dust Do not sand, dry sweep, dry scrape, drill, saw, beadblast, or mechanically chip or pulverize existing resilient flooring, backing, lining felt, asphaltic "cutback" adhesive, or other adhesive

3 06 PATCHING

A Patch with durable seams that are as invisible as possible

B Where feasible, inspect and test patched areas to demonstrate integrity of installation

C Restore exposed finishes of patched areas and extend finish restoration into retained adjoining construction in manner that will eliminate evidence of patching and refinishing

D Where removal of walls or partitions extends one finished area into another, patch and repair floor and wall surfaces in new space to provide an even surface of uniform color and appearance Remove existing floor and wall finish coverings and replace with new materials, as necessary to achieve uniform match, color, texture and appearance

E Where patching occurs in smooth painted surface, extend final paint coat over entire unbroken surface containing patch, after patched areas has received primer and second coat

F Patch and repair existing ceilings as required, provide even plane surface, uniform appearance

G Patch existing plaster or textural finish on gypsum board surfaces using materials and methods to match existing

3 07 LEGAL DISPOSAL OF DEMOLISHED MATERIALS

A Except for items or materials indicated to be reused, salvaged, reinstalled, or otherwise indicated to remain resident owner's or tenant's property, remove and transport demolished materials debris, rubbish, and other materials resulting from demolition operations from Site
   1 If hazardous materials are encountered during demolition operations, comply with applicable regulations, laws, and ordinances concerning removal, handling, and protection against exposure or environmental pollution
   2 Do not allow demolished materials to accumulate on Site
   3 Remove and transport debris in manner that prevents spillage on adjacent surfaces and areas
   4 Do not burn demolished materials on Project Site
   5 Legally dispose of demolished materials in an EPA and ADEQ -approved landfill

3 08 RECONDITIONING EXISTING SUBSTRATES

A Clean surfaces on which new materials will be applied, removing adhesives, bitumen, and other adhering materials, as necessary to furnish acceptable substrates for new materials

B Determine substrate requirements for reconditioned surfaces in cooperation with manufacturer's representative and installer of each new material involved

3 09 CLEANUP AND REPAIR

A Upon completion of Selective Demolition work, remove tools, equipment, and demolished materials from Site
   1 Remove protections and leave interior areas clean and ready for new construction
   2 Repair demolition performed in excess of that required
   3 Return elements of construction and surfaces to remain to condition existing prior to start operations

B Adjacent Areas, Construction, Structures and Improvements
   1 Clean of dust, dirt, and debris caused by Selective Demolition operations.
   2 Repair surfaces soiled or damaged by Selective Demolition Work
   3 Return to condition existing before Selective Demolition operations began

End of Section 02 41 19

SECTION 06 10 00 - ROUGH CARPENTRY

PART 1 - GENERAL

1 01 SUMMARY

A Section includes Wood blocking and nailers Plywood backing panels

1 02 RELATED SECTIONS

A Section 062000 – FINISH CARPENTRY

1 03 DELIVERY, STORAGE, AND HANDLING

A Stack lumber flat with spacers between each bundle to provide air circulation Provide for air circulation around stacks and under coverings.

PART 2 - PRODUCTS

2 01 WOOD PRODUCTS, GENERAL

A For replacement of broken or water damaged framing above floor plates.

B Lumber DOC PS 20 and applicable rules of grading agencies indicated If no grading agency is indicated, provide lumber that complies with the applicable rules of any rules-writing agency certified by the ALSC Board of Review Provide lumber graded by an agency certified by the ALSC Board of Review to inspect and grade lumber under the rules indicated
1 Factory mark each piece of lumber with grade stamp of grading agency
2 Where nominal sizes are indicated, provide actual sizes required by DOC PS 20 for moisture content specified
3 Where actual sizes are indicated, they are minimum dressed sizes for dry lumber
4 Provide dressed lumber, S4S, unless otherwise indicated

2 02 WOOD-PRESERVATIVE-TREATED LUMBER

A. For replacement of broken or water damaged floor plates

B Preservative Treatment by Pressure Process AWPA C2, except that lumber that is not in contact with the ground and is continuously protected from liquid water may be treated according to AWPA C31 with inorganic boron (SBX)
1 Preservative Chemicals Acceptable to authorities having jurisdiction and containing no arsenic or chromium
2 Kiln-dry lumber after treatment to a maximum moisture content of 15 percent Do not use material that is warped or does not comply with requirements for untreated material

3 Mark lumber with treatment quality mark of an inspection agency approved by the ALSC Board of Review
4 Application Treat items indicated on Drawings, and wood framing, sills, sleepers, nailers, blocking, furring and similar members in contact with masonry or concrete

2 03 MISCELLANEOUS LUMBER

A Provide miscellaneous lumber indicated and lumber for support or attachment of other construction, including blocking, nailers, furring and grounds

B For items of dimension lumber size, provide No 2 grade lumber with 15 percent maximum moisture content of any species

C For blocking not used for attachment of other construction, Utility, Stud, or No 3 grade lumber of any species may be used provided that it is cut and selected to eliminate defects that will interfere with its attachment and purpose

D For blocking and nailers used for attachment of other construction, select and cut lumber to eliminate knots and other defects that will interfere with attachment of other work

E For furring strips for installing plywood, select boards with no knots capable of producing bent-over nails and damage to paneling

2 04 FASTENERS AND ANCHORS

A Provide fasteners of size and type indicated that comply with requirements specified in this Article for material and manufacture Where rough carpentry is exposed to weather, in ground contact, pressure-preservative treated, or in area of high relative humidity, provide fasteners of Type 304 stainless steel.
1 Nails, Brads, and Staples ASTM F 1667
2 Power-Driven Fasteners NES NER-272
3 Wood Screws ASME B18 6 1
4. Lag Bolts. ASME B18 2 1 (ASME B18.2 3 8M)
5 Bolts Steel bolts complying with ASTM A 307, Grade A (ASTM F 568M, Property Class 4 6), with ASTM A 563 (ASTM A 563M) hex nuts and, where indicated, flat washers
6 Expansion Anchors Anchor bolt and sleeve assembly of material indicated below with capability to sustain, without failure, a load equal to 6 times the load imposed when installed in unit masonry assemblies and equal to 4 times the load imposed when installed in concrete as determined by testing per ASTM E 488 conducted by a qualified independent testing and inspecting agency
a Material Stainless steel with bolts and nuts complying with ASTM F 593 and ASTM F 594, Alloy Group 1 or 2 (ASTM F 738M and ASTM F 836M, Grade A1 or A4).

2 05 MISCELLANEOUS MATERIALS

A Sill-Sealer Gaskets Closed-cell neoprene foam, 1/4 inch (6 4 mm) thick, selected from manufacturer's standard widths to suit width of sill members indicated

B Flexible Flashing Self-adhesive, rubberized-asphalt compound, bonded to a high-density, polyethylene film to produce an overall thickness of not less than 0 025 inch (0 6 mm)

C Water-Repellent Preservative NWWDA-tested and -accepted formulation containing 3-iodo-2-propynyl butyl carbamate, combined with an insecticide containing chloropyrifos as its active ingredient

PART 3 - EXECUTION

3 01 INSTALLATION, GENERAL

A Set rough carpentry to required levels and lines, with members plumb, true to line, cut, and fitted Fit rough carpentry to other construction, scribe and cope as needed for accurate fit Locate furring, nailers, blocking, grounds, and similar supports to comply with requirements for attaching other construction
1 Framing Standard Comply with AF&PA's "Details for Conventional Wood Frame Construction," unless otherwise indicated
2 Do not splice structural members between supports, unless otherwise indicated

B Provide blocking and framing as indicated and as required to support facing materials, fixtures, specialty items, and trim Provide metal clips for fastening gypsum board or lath at corners and intersections where framing or blocking does not provide a surface for fastening edges of panels Space clips not more than 16 inches (406 mm) o c

C Provide fire blocking in furred spaces, stud spaces, and other concealed cavities as indicated and as follows Fire block furred spaces of walls at ceiling, and at not more than 96 inches (2438 mm) o c with solid wood blocking or noncombustible materials accurately fitted to close furred spaces

D Sort and select lumber so that natural characteristics will not interfere with installation or with fastening other materials to lumber Do not use materials with defects that interfere with function of member or pieces that are too small to use with minimum number of joints or optimum joint arrangement

E Comply with AWPA M4 for applying field treatment to cut surfaces of preservative-treated lumber
1 Use inorganic boron for items that are continuously protected from liquid water.

F Securely attach rough carpentry work to substrate by anchoring and fastening as indicated, complying with the following
1 NES NER-272 for power-driven fasteners.
2 Table 2304 9 1, "Fastening Schedule," in ICC's International Building Code

G Use common wire nails, unless otherwise indicated Select fasteners of size that will not fully penetrate members where opposite side will be exposed to view or will receive finish materials Make tight connections between members Install fasteners without splitting wood, do not countersink nail heads, unless otherwise indicated

H Wood Ground, Sleeper, Blocking, and Nailer Installation Install where indicated and where required for screeding or attaching other work Form to shapes indicated and cut as required for true line and level of attached work Coordinate locations with other work involved.
1 Attach items to substrates to support applied loading Recess bolts and nuts flush with surfaces, unless otherwise indicated

2 Where wood-preservative-treated lumber is installed adjacent to concrete, masonry or metal, install continuous flexible flashing separator between wood and other material

3 02 PROTECTION

A Protect wood that has been treated with inorganic boron (SBX) from weather If, despite protection, inorganic boron-treated wood becomes wet, apply EPA-registered borate treatment Apply borate solution by spraying to comply with EPA-registered label

B Protect rough carpentry from weather. If, despite protection, rough carpentry becomes wet, apply EPA-registered borate treatment Apply borate solution by spraying to comply with EPA-registered label

End of Section 06 10 00

SECTION 06 20 00 – FINISH CARPENTRY

PART 1 - GENERAL

1 01 SUMMARY

A Section includes
1 Interior and standing running trim, baseboards, and related finish carpentry work
2 Wood furring, blocking, shims, and hanging strips for installing woodwork items unless concealed within other construction before woodwork installation

1 02 RELATED SECTIONS

A SECTION 061000 – ROUGH CARPENTRY

1 03 FIELD CONDITIONS

A Environmental Limitations Do not deliver or install woodwork until building is enclosed, wet work is complete, and HVAC system is operating and maintaining temperature between 60 and 90 deg F (16 and 32 deg C) and relative humidity between 17 and 50 percent during the remainder of the construction period.

PART 2 - PRODUCTS

2 01 MATERIALS

A Provide materials that comply with requirements of WI's quality standard for each type of woodwork and quality grade specified, unless otherwise indicated
1 Wood Species for Opaque Finish Any closed grained hardwood, eastern white pine, sugar pine, or western white pine Economy grade Match width (height), thickness and shape of existing running trim
2 Softwood Plywood Comply with DOC PS 1, Medium Density Overlay Plywood used in the building's interior must contain no added urea-formaldehyde
3 Installation Adhesives and Glues VOC Limitation (40 CFR 59, Subpart D – EPA Method 24)
a Wood Glues 30 g/L
b Contact Adhesive 250 g/L

B Standing or Running Trim, Furring, Blocking, Shims, and Hanging Strips Softwood or hardwood lumber, kiln dried to less than 15 percent moisture content

C Anchors Select material, type, size, and finish required for each substrate for secure anchorage Provide nonferrous-metal or hot-dip galvanized anchors and inserts on inside face of exterior walls and elsewhere as required for corrosion resistance Provide toothed-steel or lead expansion sleeves for drilled-in-place anchors.

D Adhesives Do not use adhesives that contain urea formaldehyde

2 02 FABRICATION, GENERAL

A Fabricate woodwork to dimensions, profiles, and details indicated Ease edges to radius indicated
1 Edges of Solid-Wood (Lumber) Members 3/4 Inch Thick or Less 1/16 inch
2 Edges of Rails and Similar Members More Than 3/4 Inch Thick 1/8 inch

PART 3 - EXECUTION

3 01 PREPARATION

A Condition woodwork to average prevailing humidity conditions in installation areas before installing

B Before installing woodwork, examine shop-fabricated work for completion and complete work as required, including removal of packing and backpriming

C. Prime all wood with approved primer prior to installation and any existing surfaces if disturbed

3 02 INSTALLATION

A. Install woodwork to comply with requirements for the same grade specified in Part 2 for fabrication of type of woodwork involved

B Install woodwork level, plumb, true, and straight Shim as required with concealed shims Install level and plumb (including tops) to a tolerance of 1/8 inch in 96 inches (3 mm in 2400 mm) Scribe and cut woodwork to fit adjoining work, refinish cut surfaces, and repair damaged finish at cuts Anchor woodwork to anchors or blocking built in or directly attached to substrates Secure with countersunk, concealed fasteners and blind nailing as required for complete installation Use fine finishing nails or finishing screws for exposed fastening, countersunk and fill flush to match final trim shape, ready for priming and finish painting

C Standing and Running Trim Install with minimum number of joints possible, using full length pieces (from maximum length of lumber available) to greatest extent possible.
1 Miter cut corners to fit running and standing trim
2 Backout of groove backs of flat trim members and kerf backs of other side flat members, except for members with ends exposed in finished work

D Touch up finishing work specified in this Section after installation of woodwork Fill nail holes with matching filler where exposed

3 03 CLEANING

A Repair damaged and defective woodwork, where possible, to eliminate functional and visual defects, where not possible to repair, replace woodwork Adjust joinery for uniform appearance

B Clean woodwork on exposed and semi-exposed surfaces Touch up shop-applied finishes to restore damaged or soiled areas

End of Section 06 20 00

SECTION 07 90 00 - JOINT PROTECTION

PART 1 - GENERAL

1 01 SUMMARY

A Section Includes silicone joint sealants

1 02 SUBMITTALS

A Provide Joint-sealant manufacturer, product name, formulation, color and VOC level

1 03 QUALITY ASSURANCE

A Source Limitations Obtain each kind of joint sealant from single source from single manufacturer

1 04 FIELD CONDITIONS

A. Do not proceed with installation of joint sealants under the following conditions·
   1 When ambient and substrate temperature conditions are outside limits permitted by joint-sealant manufacturer or are below 40 deg F (5 deg C), or when joint substrates are wet.
   2 Where joint widths are less than those allowed by joint-sealant manufacturer for application
   3 Where contaminants capable of interfering with adhesion have not yet been removed from joint substrates

PART 2 - PRODUCTS

2 01 MATERIALS, GENERAL

A. Compatibility Provide joint sealants, backings, and other related materials that are compatible with one another and with joint substrates under conditions of service and application, as demonstrated by joint-sealant manufacturer, based on testing and field experience

B Liquid-Applied Joint Sealants Comply with ASTM C 920 and other requirements indicated for each liquid-applied joint sealant specified, including those referencing ASTM C 920 classifications for type, grade, class, and uses related to exposure and joint substrates
   1 Suitability for Immersion in Liquids Where sealants are indicated for Use I for joints that will be continuously immersed in liquids, provide products that have undergone testing according to ASTM C 1247 Liquid used for testing sealants is deionized water, unless otherwise indicated

C Stain-Test-Response Characteristics Where sealants are specified to be nonstaining to porous substrates, provide products that have undergone testing according to ASTM C 1248 and have not stained porous joint substrates indicated for Project

D Suitability for Contact with Food· Where sealants are indicated for joints that will come in repeated contact with food, provide products that comply with 21 CFR 177 2600

E. Colors of Exposed Joint Sealants As selected by Architect from manufacturer's full range.

2 02 SILICONE JOINT SEALANTS

A Mildew-Resistant, Single-Component, Nonsag, Neutral-Curing Silicone Joint Sealant ASTM C 920, Type S, Grade NS, Class 25, for Use NT
1 Products Subject to compliance with requirements, available products that may be incorporated into the Work include, but are not limited to, the following
a Pecora Corporation, 898

2 03 JOINT SEALANT BACKING

A Provide sealant backings of material that are nonstaining, are compatible with joint substrates, sealants, primers, and other joint fillers, and are approved for applications indicated by sealant manufacturer based on field experience and laboratory testing

B Cylindrical Sealant Backings· ASTM C 1330, Type C (closed-cell material with a surface skin), Type O (open-cell material), Type B (bicellular material with a surface skin), as approved in writing by joint-sealant manufacturer for joint application indicated, and of size and density to control sealant depth and otherwise contribute to producing optimum sealant performance

C Bond-Breaker Tape Polyethylene tape or other plastic tape recommended by sealant manufacturer for preventing sealant from adhering to rigid, inflexible joint-filler materials or joint surfaces at back of joint Provide self-adhesive tape where applicable

2 04 MISCELLANEOUS MATERIALS

A Primer Material recommended by joint-sealant manufacturer where required for adhesion of sealant to joint substrates indicated, as determined from preconstruction joint-sealant-substrate tests and field tests

B Cleaners Chemical cleaners acceptable to manufacturers of sealants and backing materials, free of oily residues or other substances capable of staining or harming joint substrates and adjacent nonporous surfaces in any way, and formulated to promote optimum adhesion of sealants to joint substrates.

C Masking Tape Nonstaining, nonabsorbent material compatible with joint sealants and surfaces adjacent to joints

PART 3 - EXECUTION

3 01 EXAMINATION

A Examine joints indicated to receive joint sealants, for compliance with requirements for joint configuration, installation tolerances, and other conditions affecting joint-sealant performance

B Proceed with installation only after unsatisfactory conditions have been corrected

3 02 PREPARATION

A Surface Cleaning of Joints. Clean out joints immediately before installing joint sealants to comply with joint-sealant manufacturer's written instructions and the following requirements

1 Remove all foreign material from joint substrates that could interfere with adhesion of joint sealant, including dust, paints (except for permanent, protective coatings tested and approved for sealant adhesion and compatibility by sealant manufacturer), old joint sealants, oil, grease, waterproofing, water repellents, water, surface dirt, and frost
2 Clean porous joint substrate surfaces by brushing, grinding, mechanical abrading, or a combination of these methods to produce a clean, sound substrate capable of developing optimum bond with joint sealants. Remove loose particles remaining after cleaning operations above by vacuuming or blowing out joints with oil-free compressed air Porous joint substrates include the following
   a Concrete
   b Masonry
   c. Unglazed surfaces of ceramic tile
   d Unpainted surface of gypsum board
   e Cultured marble
3 Remove laitance and form-release agents from concrete
4 Clean nonporous joint substrate surfaces with chemical cleaners or other means that do not stain, harm substrates, or leave residues capable of interfering with adhesion of joint sealants Nonporous joint substrates include the following·
   a Metal
   b Glass.
   c. Porcelain enamel
   d Glazed surfaces of ceramic tile
   e Painted surface of gypsum board.
   f Painted surface of residential casework

B Joint Priming Prime joint substrates where recommended by joint-sealant manufacturer or as indicated by preconstruction joint-sealant-substrate tests or prior experience Apply primer to comply with joint-sealant manufacturer's written instructions Confine primers to areas of joint-sealant bond, do not allow spillage or migration onto adjoining surfaces

C Masking Tape Use masking tape where required to prevent contact of sealant or primer with adjoining surfaces that otherwise would be permanently stained or damaged by such contact or by cleaning methods required to remove sealant smears Remove tape immediately after tooling without disturbing joint seal

3 03 INSTALLATION OF JOINT SEALANTS

A Comply with joint-sealant manufacturer's written installation instructions for products and applications indicated, unless more stringent requirements apply.

B Sealant Installation Standard Comply with recommendations in ASTM C 1193 for use of joint sealants as applicable to materials, applications, and conditions indicated.

C. Install sealant backings of kind indicated to support sealants during application and at position required to produce cross-sectional shapes and depths of installed sealants relative to joint widths that allow optimum sealant movement capability
   1 Do not leave gaps between ends of sealant backings.
   2 Do not stretch, twist, puncture, or tear sealant backings
   3 Remove absorbent sealant backings that have become wet before sealant application and replace them with dry materials

D Install bond-breaker tape behind sealants where sealant backings are not used between sealants and backs of joints.

E Install sealants using proven techniques that comply with the following and at the same time backings are installed
1 Place sealants so they directly contact and fully wet joint substrates
2 Completely fill recesses in each joint configuration
3 Produce uniform, cross-sectional shapes and depths relative to joint widths that allow optimum sealant movement capability

F Tooling of Nonsag Sealants Immediately after sealant application and before skinning or curing begins, tool sealants according to requirements specified in subparagraphs below to form smooth, uniform beads of configuration indicated, to eliminate air pockets, and to ensure contact and adhesion of sealant with sides of joint
1 Remove excess sealant from surfaces adjacent to joints
2. Use tooling agents that are approved in writing by sealant manufacturer and that do not discolor sealants or adjacent surfaces
3 Provide concave joint profile per Figure 8A in ASTM C 1193, unless otherwise indicated.
4 Provide flush joint profile where indicated per Figure 8B in ASTM C 1193
5 Provide recessed joint configuration of recess depth and at locations indicated per Figure 8C in ASTM C 1193 Use masking tape to protect surfaces adjacent to recessed tooled joints

3 04 FIELD QUALITY CONTROL

A. Evaluation of Field-Adhesion Test Results Sealants not evidencing adhesive failure from testing or noncompliance with other indicated requirements will be considered satisfactory. Remove sealants that fail to adhere to joint substrates during testing or to comply with other requirements Retest failed applications until test results prove sealants comply with indicated requirements

3 05 CLEANING

A Clean off excess sealant or sealant smears adjacent to joints as the Work progresses by methods and with cleaning materials approved in writing by manufacturers of joint sealants and of products in which joints occur

3 06 PROTECTION

A Protect joint sealants during and after curing period from contact with contaminating substances and from damage resulting from construction operations or other causes so sealants are without deterioration or damage at time of Substantial Completion If, despite such protection, damage or deterioration occurs, cut out and remove damaged or deteriorated joint sealants immediately so installations with repaired areas are indistinguishable from original work

3 07 JOINT-SEALANT SCHEDULE

A Joint-Sealant Application Mildew-resistant interior joints in vertical surfaces and horizontal nontraffic surfaces
1 Joint Sealant Location
a Joints between plumbing fixtures and adjoining walls, floors, and counters.
b Tile control and expansion joints where indicated
c Other joints as indicated
2 Joint Sealant Mildew resistant, single component, nonsag, neutral curing, Silicone
3. Joint-Sealant Color As selected by Architect from manufacturer's full range of colors

End of Section 07 90 00